BNL KARTING SERIES

TECHNICAL REGULATIONS 2020

JUNIOR MAX

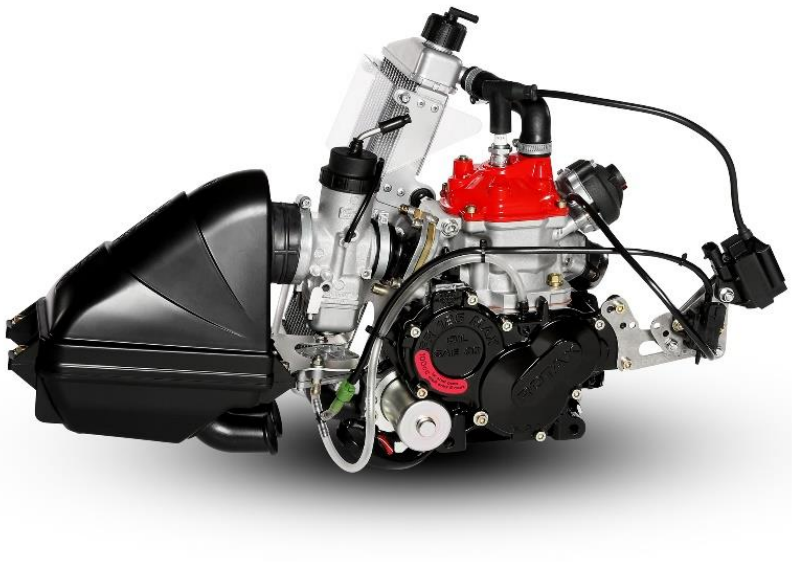

RACB - VISA T01 - BNL/B20

Technical Regulations EVO MAX JUNIOR

3.00 / Chassis	Maximum one chassis per competitor per event (weekend). Only CIK/FIA homologated chassis after 2006 are allowed. The homologation sheet has to be available at any time.		
3.01 / Brake system	Only hydraulic, CIK/FIA homologated brakes are allowed. The homologation sheet has to be available at any time. Front brakes are not allowed. Between the master brake cylinder and the brake pedal an extra security brake cable is mandatory. Minimum 1,8mm thickness. Also an extra security clip is mandatory at the brakepads. A ceramic brake disc is not allowed.		
3.02 / Rear axle			
Diameter	Ø40mm of Ø50mm magnetic material, in a whole.		
Wall thickness	(40mm) minimum 2,9mm / (50mm) minimum 1,9mm (entire length.)		
4.03 / Rims	Aluminium or magnesium/diameter 5 inch		
Dry	Maximum 135/215mm / measured to the outside of the rim		
Rain	Maximum 130/180mm +/- 5mm / measured to the outside of the rim		
Rear width	Maximum 140cm / measured to the outside of the rim Minimum : see 3.05 “rear bumper”		
	Any additions to the rims are not allowed. Except : adhesive balancing lead. Bead retaining screws are mandatory.		
3.04 / Tyres	MOJO®		
Slicks	MOJO D2xx CIK with barcode	Front: 4,5x10x5	Rear: 7,1x11x5
Regen	MOJO W5 CIK with barcode	Front: 4,5x10x5	Rear: 6,0x11x5
	Slick race tyres must be ordered in advance through the organisation (voucher system) Two sets of slick tyres are allowed for each meeting. It is allowed to mix the tyres during the event. (BNL Karting Series championship). One set of slick tyres is allowed for the BNL Kick-Off. Tires must be mounted according to the direction of rotation defined on the tire. If it’s detected on the pre-grid area that a driver has fitted his tires incorrectly (wrong direction) then he will be moved to the repair zone. The driver has the possibility to assemble his tires correctly, with the help of one (1) mechanic;.Only putting the tires in the correct direction is allowed. It is not allowed to do other technical changes. Afterwards he may start, but only when the start is given. He is not entitled to participate in the formation laps. If the observation takes place after the race, the driver will be excluded from the relevant part of the competition. It is not allowed to modify the tires. The brand name, code number, barcode and the indications always need to be visible on the tires. Only normal air is allowed to fill the tires.		
3.05 / Rear bumper/	The plastic rear bumper must be CIK homologated and cover at least 2/3 of the rear wheels, and may not protrude the rear tyres. .		

3.06 / Side-pods Front panel Front fearing	Only a complete CIK homologated spoiler set is allowed. The complete spoiler set should have the same homologation number. The homologation sheet has to be available at any time. Using composite like carbon fiber is not allowed. Only plastic frame protection parts (left, right, front) is allowed. The complete set should be free of damage. A CIK front fearing bumper is mandatory for all type of chassis and has to be mounted according the CIK regulations.
3.07 / Fueltank	The plastic fueltank should be mounted in a correct way, at the appropriate place. All vents must culminate in a reservoir.
3.08 / Age	12 years (ór reach the age of 12 in 2020), till 15 years (15 years included)
3.09 / Weights and clothing	Minimum 145 kg on each moment of the event. Kart + complete race gear. A driver must be equipped and appear for inspection with the following gear: (see time table) Complete equipment must comply with the CIK regulations A turbo visor is allowed in case of rain Gloves which cover the entire hand High shoes that cover and protect the ankles. The responsible doctor on the event may, for safety reasons, disapprove certain types of breast, neck or rib protections. A neck protection is not required yet recommended From the moment when the driver goes on track, he must wear the mandatory race gear as described in this article.
3.10 / Race numbers	Yellow plate with black digits. (Range 201 - 299) (Front, rear, left and right sides)
3.11 / Data Systems	Data logging with or without a GPS module is allowed. Data from the GPS module may only be saved in a system which has been mounted on the kart. Every other form of telemetry or radio communication is not allowed. Transferring data during sessions to a device, other than the data logger on board is not allowed. Power to activate the data system should be taken from a separate battery. It is not allowed to take power from the battery that is meant for the engine.
3.12 / Seat	The seat has to be fixed at minimum 4 places, 2 at the top (left and right) and 2 on the bottom (left and right) All seat supports have to be fixed with washers with a minimum thickness of 1,5mm and a diameter of 40mm
3.13 / Lead	Drivers who are lighter than the required minimum weight shall attach extra weight on their kart, until they reach the prescribed weight. Lead may only be installed on the chassis or on the seat. The Technical Scrutineering can force each driver to mount the lead on another place. The lead shall be mounted so that everyone's security is guaranteed at all times: • Up to 3kg: at least with 2x M6 bolts including washer • Up to 6kg: at least with 2x M8 bolts including washer Up to 10kg: at least with 4x M8 bolts including washer
3.14 / Cameras	Drivers may use a camera if mounted in an appropriate way and accepted by the Scrutineers. Helmet cameras are not allowed. Clips, etc, for mounting a camera may not be fit on the helmet.

Engine – Rotax EVO MAX JUNIOR

3.15 / Foreword	These regulations will be valid as of 1st of February 2020 and will replace all previous regulations. Only original spare parts which are manufactured by Rotax BRP are legal to be used. Any modifications are not allowed. Eventually helix reparations with heli coils and/o wire bushes are allowed.
3.16 / Engines	Each race-meeting it is allowed to enter two engines. The engines should be sealed with an official Rotax seal. The engine registration card has to be available at any time.
3.17 / Squish	Minimum 1,20mm (including possible carbon deposits)
Method of measuring	The squish gap must be measured with a certified slide gauge and by using a 2 mm tin with (Rotax part no. 580 130). The crankshaft must be turned by hand slowly over top dead centre to squeeze the tin wire. The squish gap must be measured on the left and right side in the direction of the piston pin. Engine temperature below 30 degrees Celcius The average value of the two measurements counts.
3.18 / Combustion chamber insert	Cast identification code has to be "223 389" or "223 389 1" or "223 389 2" or 223 389 2/1" or “223 389 2/2”. Casted wording "ROTAX" and/or "MADE IN AUSTRIA" must be shown. Height of the combustion chamber insert has to be **28,80mm +/- 0,2mm (H)** 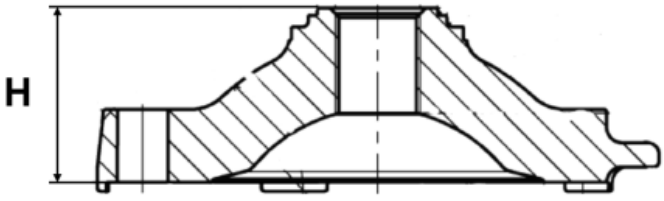

	The profile of the combustion chamber insert has to be checked with a template (ROTAX part no. 277 390). The crack of light between the template and the profile of the combustion chamber insert has to be the same over the whole profile.
3.19 / Cylinder head cover	It is allowed to change the colour of the cylinderhead cover for indentification.
3.20 / Piston with ring assembly	Original, coated, aluminium, cast piston with one piston ring. The piston has to show on the inside the cast wording "ELKO" (1) and "MADE IN AUSTRIA" (2) 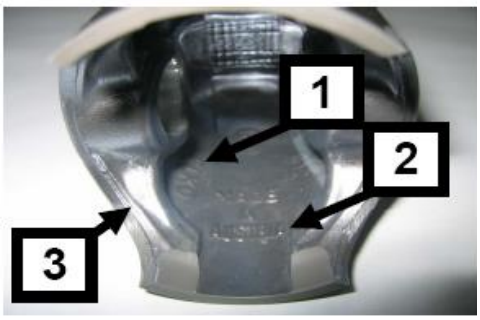 Machined areas are: • Top end of piston • Outside diameter • Groove for the piston ring • Bore for the piston pin • Inside diameter at bottom end of piston • Some pre-existing factory removal (3) of flashing at the cut out of the piston skirt. All other surfaces are not machined and have cast surface. Any mechanical treatment or rework of the piston is forbidden, (e.g. removal of carbon deposits). Cleaning without changing the original surface is allowed. If carbon is removed it must be consistently removed across the entire surface without altering the profile of the piston itself. Example : selectively removing carbon in the squish measurements areas is forbidden.

	Original, magnetic, rectangular piston ring. Ring height : 0,98 +/- 0,02 mm. Piston ring is marked either with "Rotax 215 547", "Rotax 215 548", “Rotax 215 548X” or “I Rotax 215 548X” The piston ring is legal also if just parts of the marking are still visible.
3.21 / **Piston pin**	Piston pin is made out of magnetic steel. Dimensions must be according to the drawing. The minimum weight of the piston pin must not be lower than : 31,00 grams 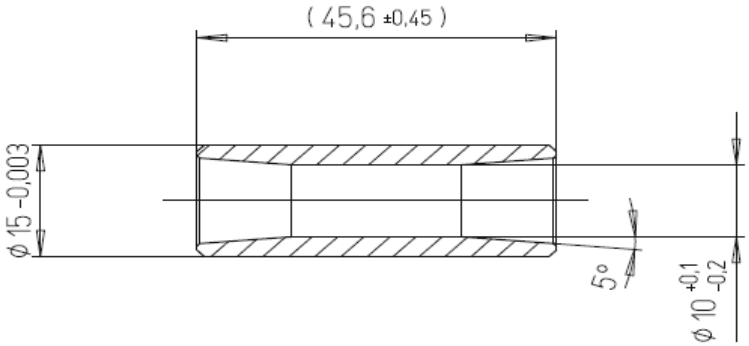
3.22 / **Cylinder**	Cylinder types >2017, Rotax partnr.: 223994 marked with the letter **“J” are the only types that are allowed. All other typers are banded.** The central boost port and exhaust port may show factory machining. See pictures below : 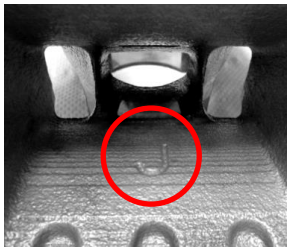 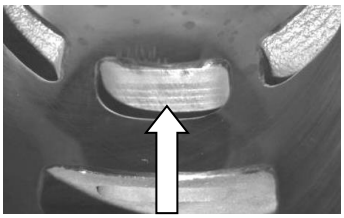 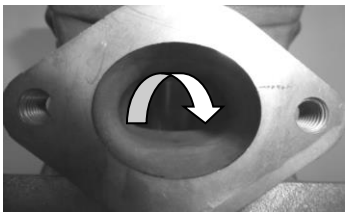
3.23 / **Maximum bore**	54,035mm (measured 10mm above the exhaust port)

3.24 / Cylinder measurments

Height of cylinder should be 87mm (-0,05 / + 0,10mm)

Exhaust port timing.
The "exhaust port timing" (distance from the top of the cylinder to the top of the exhaust port) has to be checked by means of the template (Rotax part no. 277 402).

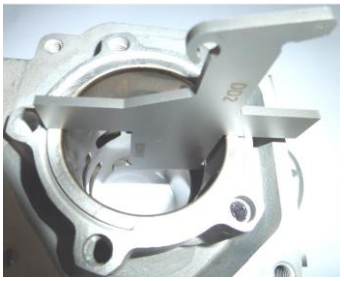

Insert the template for Junior Max cylinder into the cylinder, and move the template (at the highest point of the exhaust port) as far as possible into the exhaust port.

In this position the template may not touch the cylinder wall (nikasil).

The horizontal and vertical dimensions of the exhaust port with fully CNC machined exhaust port only) have to be checked with the template (Rotax part no. 676 240).

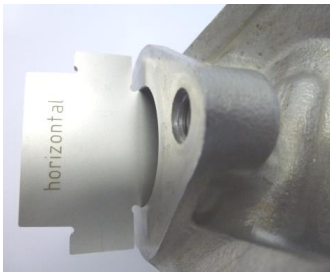

The template has to be moved in horizontal and vertical position as far as possible into the exhaust port. In both directions the template may not touch the exhaust socket flange.

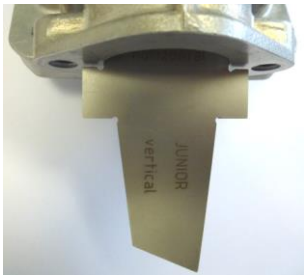

All transfer ports and passages have cast finish surface except some removal (done by the manufacturer) of cast burr at the inlet passage, exhaust port and passages.

Any modification is strictly forbidden!

	All ports have chamfered edges. See picture 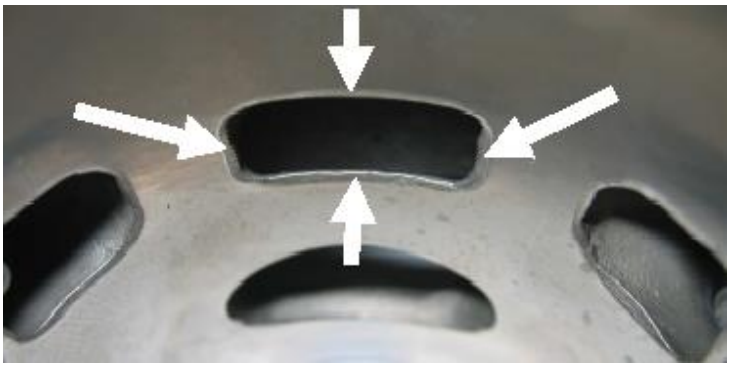 The top edge of the exhaust port may show either just a cast finish surface or signs of a CNC machining or sign of CNC machining in combination with sign of manual grinding The flange for the exhaust socket may show machined surface. Machined surface can be either flat or show a circular sealing bump. 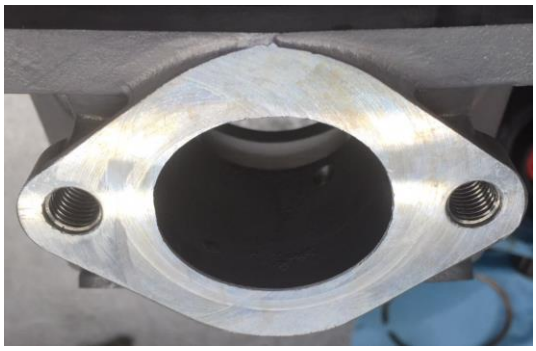
3.25 / **Inlet systeem**	The inlet manifold is marked with the name ROTAX and identification code 267915 of 267916 Some factory flash removal may be present at the conjunction of the inside contour and the carburettor stop mounting face. No additional grinding or machining is permitted.

	The reed valve assy. is equipped with 2 petal stops and 2 reeds, each having 3 petals. The thickness of the reeds is 0,60 mm +/- 0,10mm. Modification is not allowed. 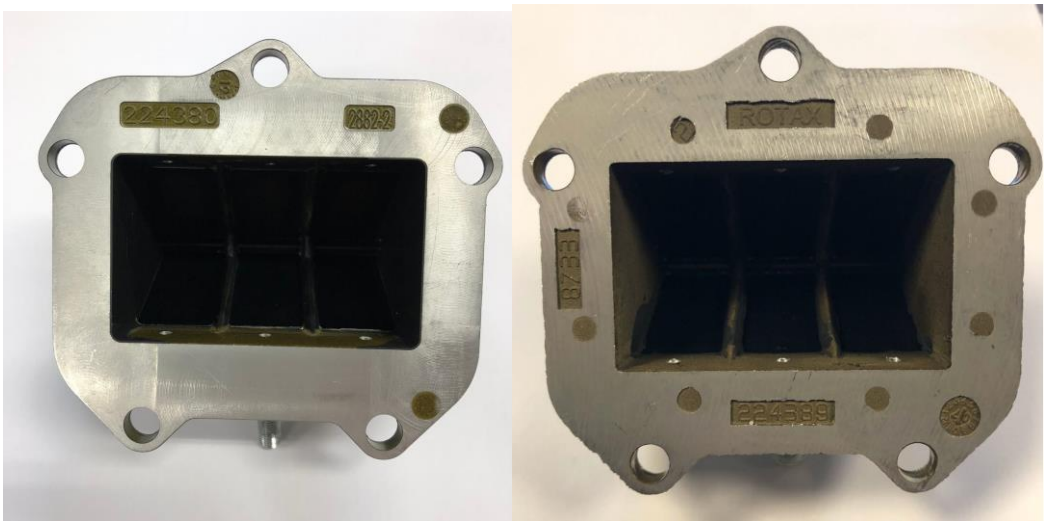 Both reed valve assy. are legal to be used. Rotax part no. 224 380 (left picture) Rotax part no. 224 389 (right picture)
3.26 / Conrod/crankshaft	Stroke: 54,5mm ± 0,1mm Conrod has to show forged numbers “367” or “362” (see pictures) Shafts of conrods are not machined. Grinding or polishing of shaft of conrod is not permitted. Crankshaft has to be unprocessed and may not be damaged. Ignition signal on crankshaft : Fit the template (Rotax part no. 277 391) on the crankshaft. Align the hole in the template for the big end pin with the big end pin of the crankshaft. The two edges of the signal machining on the crankshaft must be in line (+/-0,5mm) with the corresponding edges (MAX) of the template.

3.27 / Balans shaft / drive	Balance shaft and balance gears must be installed. Configuration of part (Rotax part nr. 237 949) only is legal. Surface (1) is not machined and must show cast surface. Measurement from centre of balance shaft to outer diameter of fly weight of balance shaft at defined length must not be lower than specified : (21,50mm) see drawing. 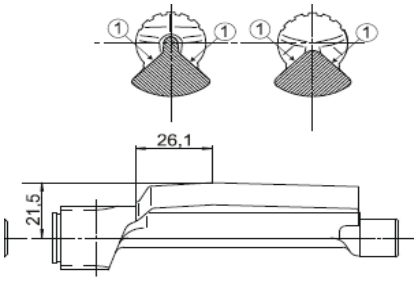 The minimum weight of the dry balance shaft must not be lower than: 255 gram for balance shaft. (Rotax part nr. 237 949) **Balance drive** Balance gears must be installed and must be aligned according to the instruction in the repair manual. Timing of the balance gears should be at any time correct as shown in the image below (see 6) Only the balance gears (Rotax part nr. 234 435 (8,8mm width) are legal to be used. 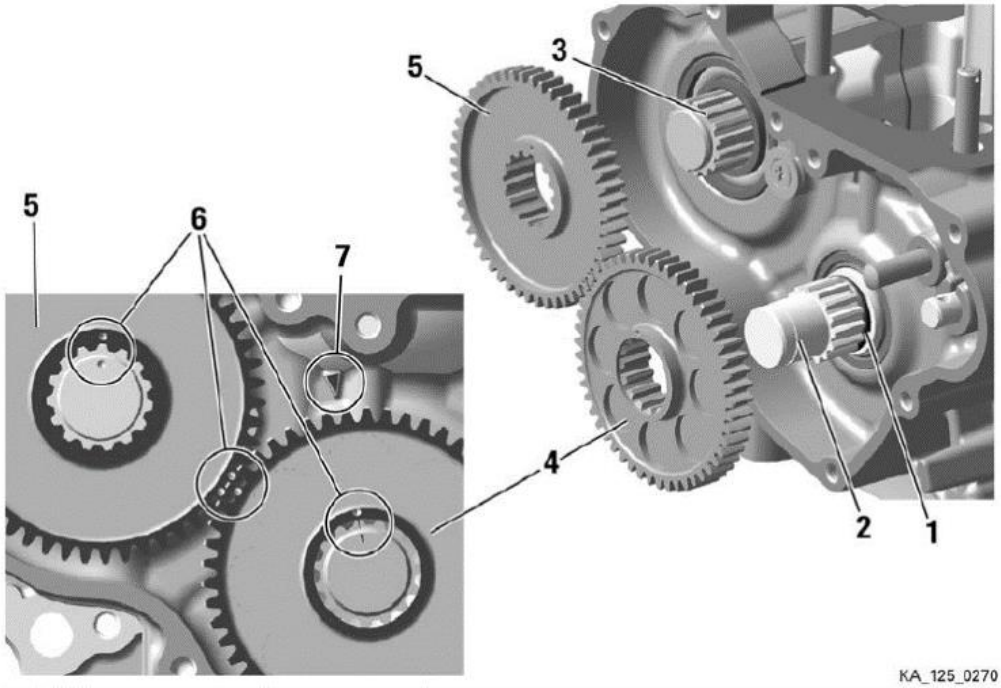
3.28 / Crankcase	As supplied by the manufacturer. No grinding/polishing is permitted in the two main transfer passages as well as in the crank area. Uncoated as well as black coated crankcases are legal to be used.
3.29 / Crankshaft main bearings	Crankshaft main bearing 6206 from FAG is allowed only. The bearings must be marked with 579165BA or Z-579165.11.KL (see picture) 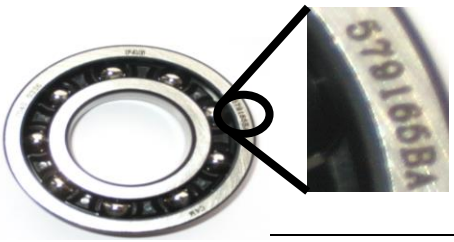

3.30 / Ignition system	Ignition coil with separate electronic ECU box (Rotax part nr. 666 813). The ECU box is still legal to be used if the sticker is removed. Ignition coil and ECU box and magnet valve have to be fitted with all components according to the illustrations below. Two different mounting versions (left illustrations and right illustration) are legal. 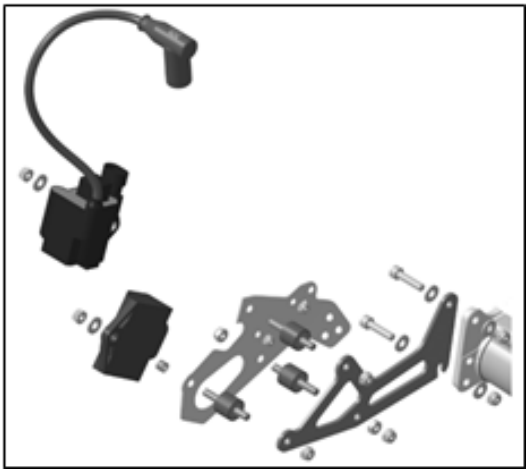 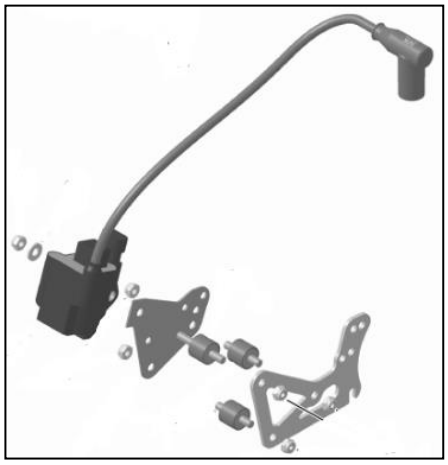 At the mounting version as shown in the left illustration, the ground cable of the cable harness has to be connected to the lower rubber buffer of the support plate. Removing the black coating of the gearbox in specific areas, for mass connection between cable harness and engine, is a legal modification. In case the mounting bracket is in conflict with a chassis component, the additions of 2 spacers, one per mounting hole, with a maximum thickness of 20mm between the mounting bracket and the gearbox cover is allowed. The visual appearance of the ignition coil must be identical with the pictures below: Ignition coil must show two pins at the terminal. The ignition coil is labelled with two stickers : “BRP 666820” and “NIG 0105”. The ignition coil is still legal to be used if one or both stickers disappeared. The minimum length of the high tension cable of the ignition coil is 210mm (from outlet of ignition coil to outlet of spark plug connector = visible length of cable) The organization reserves the right at all times to exchange ignitions coils and / or ECU boxes with ignition coils and or ECU boxes from the organization.

Pick-up

The ECU box can be checked with the ECU box tester (Rotax nr. 276 230)

Start the test by pressing the button ✓ **.** After approx. 3 seconds the type of ECU box that is actually testes will be indicated in the second line of the display.
After aprrox. 30 seconds the result of the test will be indicated in the first line of the display.

The ECU box tester has to indicate following results:
125 Junior MAX category
1. 666813JNRMAX
2. !! Test OK !!

The marking of the pick-up must show the following numbers in the first line : 029600-0710 followed by a variable production serial number.

Additional gasket, Rotax 431 500, gasket thickness = 0,8 mm
Maximum two gaskets (Rotax 431 500) are allowed to be fitted.

It is not necessary to install any additional gasket/s with the exception of the rubber sealing ring on crankcases with the machined sealing surface for the pick-up sensor.

3.31 / Sparkplug / Caps

Following spark plugs are legal to be used :
NGK GR8DI / NGK GR9DI
Denso Iridium IW 24 / 27 / 29 / 31/ 34
Electrode distance maximum 1,00 mm.

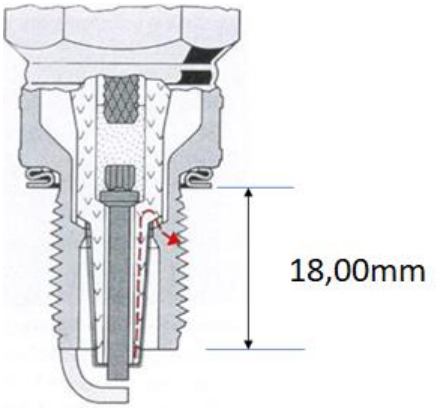

Maximum spark plug shaft including ring : 18,00mm.

Two versions of spark plug caps are legal to be used :

Version 1. Black, marked with “NGK TB05EMA”
Version 2. Red, marked with “NGK”

3.32 / Battery	Original batteries with following specifications are legal to be used : • Rotax type RX7-12B • Rotax type RX7-12L (lithium iron phosphate type) • YUASA YT7B-BS Specifications of the batteries should be readable at all times. Battery must be fitted with the original battery clamp and battery cover (pictures below) and must be fixed to the chassis with both clamps (4 screws). Battery clamp must be mounted on the left side of the seat. 1 Evo 2 Evo 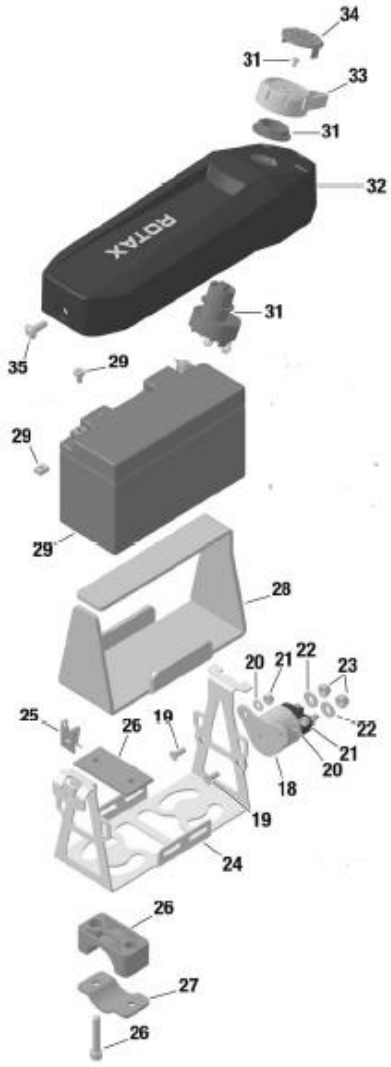 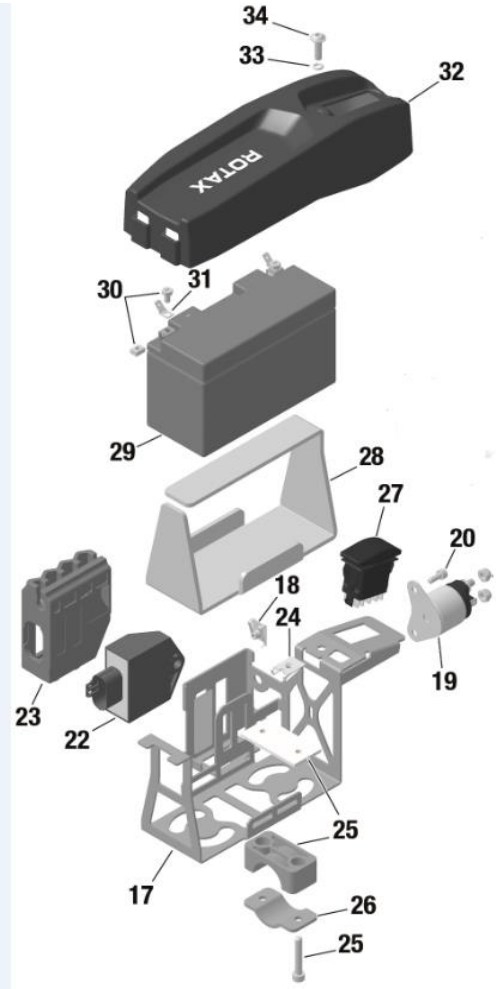 It is an allowed option to mount rubber buffers (4 pieces) between 24 en 26 (left picture) It is an allowed option to mount rubber buffers (4 pieces) between 17 and 25 (right picture) Only original plugs from the Rotax wiring harness are legal to be used.

3.33 / Carburetor	**DELLORTO Type VHSB 34**. Housing has to show the cast wording “VHSB 34”. Carburettor housing is stamped with “XS”. The complete inlet bore of the carburettor must show cast surface. Carburettor slide shows digits “45” in casting <u>Following specifiacations:</u> • Carburettor venturi insert 12,5. • Needle jet stamped with “DP267”. • Jet needle stamped with “K57”. • Start jet stamped with “60”. • Idle jet stamped with “60”. • Idle emulsion tube stamped with “45”. • Float lever according template (Rotax part nr. 277 400.) • Floats marked “4,0 gr” are legal to be used only. • Needle valve assembly stamped “150”. Needle of needle valve marked with diamond symbol “INC” only. • All jets must be correctly seated and securely fitted at any time (tightened)! • Settings of the carburettor adjustment screws (idle and idle air) are free. • Settings of main jets is free. • Optional carburettor plug (Rotax part nr. 261 030) is legal to be used. • Using the fuel sieve in the carburettor is not mandatory. (see picture) Only original Dellorto parts are legal to be used. **See checklist DELLORTO for further info.**
3.34 / Fuel pump	MIKUNI fuel pump, type DF 44-210 is mandatory. Fuel pump must be mounted on the bottom side of the support bracket for the intake silencer.
3.35 / Fuel filter	It is **not mandatory** to mount a fuel filter, but if a fuel filter is mounted only the version showed in the picture below is allowed. Rotax part nr. 274 161. Except the fuel line, the fuel pump and the original fuel filter no additional parts are legal to be mounted between the fuel tank and carburettor.

3.36 / Radiator	Only the original radiator, with ROTAX part nr. 295 928) is legal to be used. Cooling area : Height: 290mm Width: 138mm Thickness of radiator : 34mm 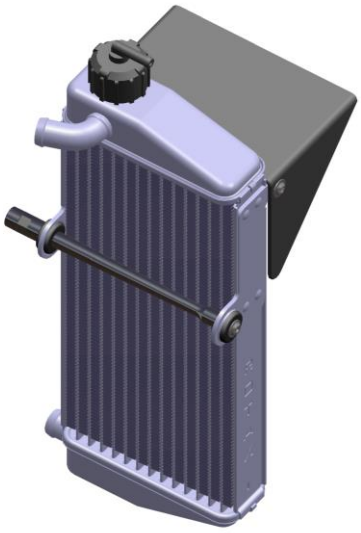 The removal of the thermostat from the cylinder head cover is an allowed modification. Radiator must be mounted with all components. The removal of the radiator flap is an allowed option. To apply tape (neutral tape without advertising only) around the radiator is an allowed modification to control the air flow through the radiator. Using a plate to control the air flow is not an allowed option. Tape may not be removed or loosen from the radiator during operation on the track. Any other non-original device to control the air flow through the radiator is prohibited. The radiator has to be mounted on the right side of the engine.
3.37 / Engine coolant	Plain water without any additives has to be used. The venting of the radiator should end in a reservoir.

3.38 / Clutch	Engagement speed of centrifugal clutch at maximum 4.000rpm (the kart without driver must start to move). Latest clutch version with steels balancing gears. 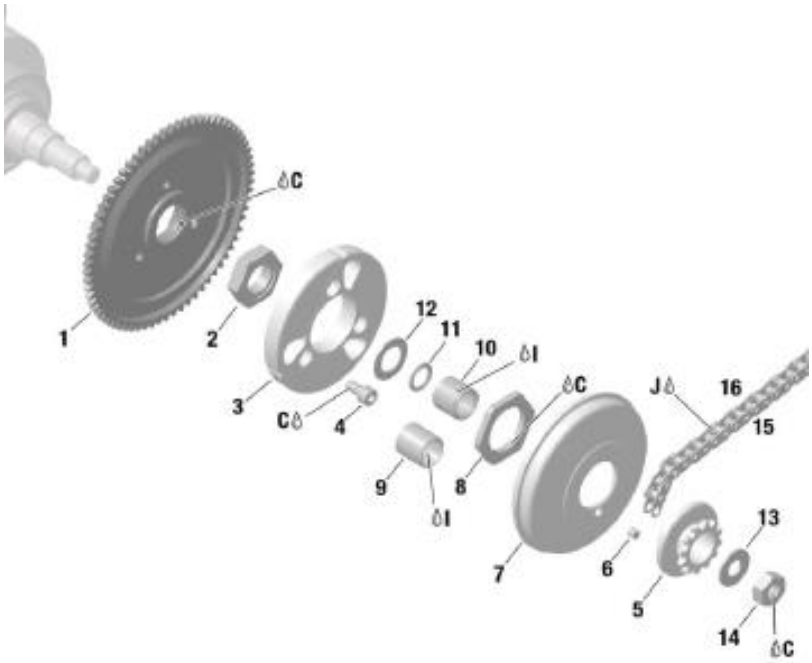 Only original Rotax clutch parts with Rotax logo are legal to be used. Clutch Rotax part nr. 659 907 Clutch must be mounted with bearing 15x19x17 (Rotax part nr. 632 415) including O-ring (Rotax part nr. 950 815) In case of using engine sprocket 11-T the nylon plain bearing 15x17x17,6 (Rotax part nr. 233 855), including O-ring (Rotax part nr. 950 815) has to be used. To avoid any type of grease within the clutch we recommend to use not any grease! Signs of emission of grease from the needle/plain bearing into the clutch drum may not exceed the picture below. Contact area between clutch and clutch drum has to be dry at any time. No lubrication allowed.

Clutch

Clutch specifications at any time :

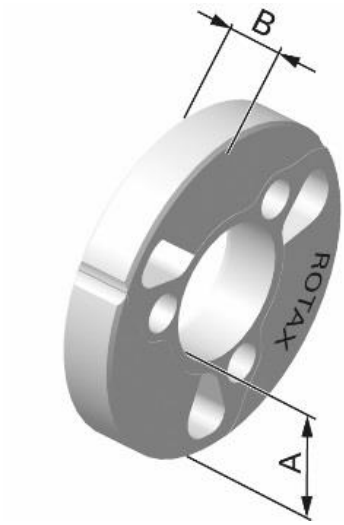

Thickness of clutch shoe (A) :
minimum : 24,10 mm

Measurements must be done at the 3 open ends of the clutch, 5 – 10 mm from the machined groove (all clutch shoes must be completely closed at measurement – no gap).

Height of clutch (B) :
Minimum : 11,45 mm

Clutch drum : (Rotax part nr. 659 930 and Rotax part nr. 659 937) are legal to be used.

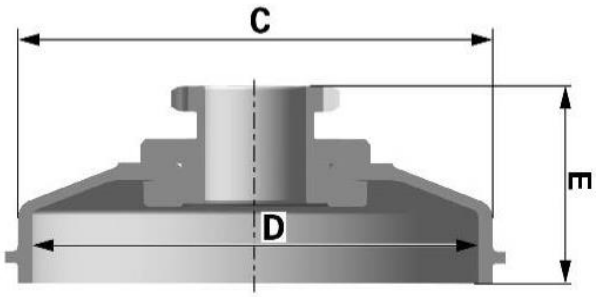

The outer diameter of the clutch drum (C) : minimum 89,50mm. Diameter has to be measured with a sliding calliper just beside the radius from the shoulder. (Not at the open end of the clutch drum).

The inner diameter of the clutch drum (D) : maximum 84,90mm. The inner diameter has to be measured with a sliding calliper. The measurement has to be done in the middle of the clutch drum (in the contact area between clutch and clutch drum).

Clutch drum height with sprocket (E) : minimum : 33 mm.

3.39 / Airbox	Intake silencer with integrated, washable air filter has to be used with all parts. and has to be mounted, in the original shape, on the support bracket with two screws (in dry and wet conditions). 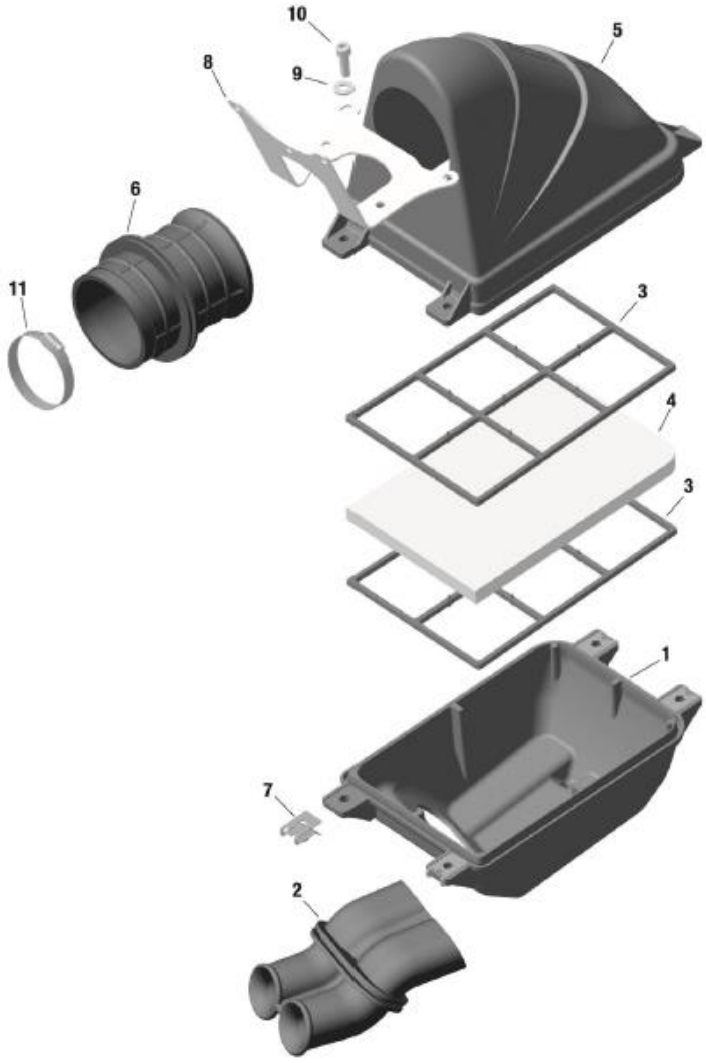 Intake silencer tube (pos2) and carburettor socket (pos 6) are marked with the wording “Rotax”. Intake silencer case bottom is marked on the inside with the Rotax part nr. 225 015. Intake silencer case, top is marked on the inside with the Rotax part nr. 225 025 The ‘TWIN AIR” filter element is mandatory to use. (see picture)

	Using elements with the wording “Aprillia” is not allowed !
3.40 / Exhaust system	Original exhaust system as supplied by Rotax is mandatory to be used. Exhaust system, Rotax EVO (Rotax part nr. 273 078) is mandatory. 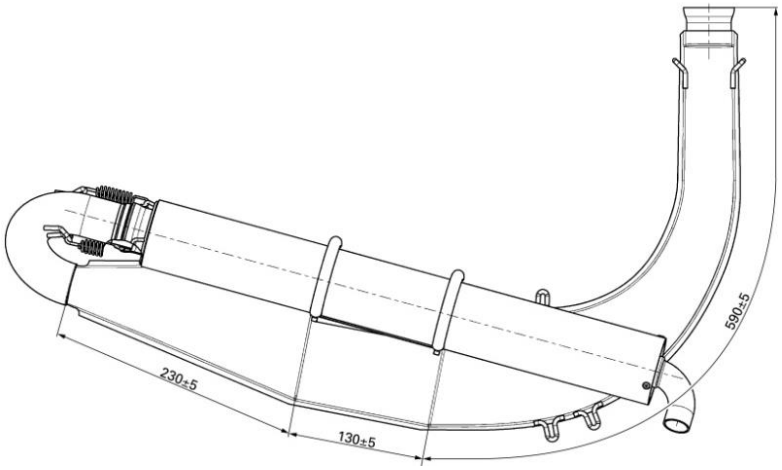 Turned pipe with 180° elbow and silencer are two separate pieces. The silencer is fixed with two springs to the 180° elbow and two springs to the tuned pipe. To fit a 3rd original spring (crosswise at the ball joint connection between 180° elbow and silencer) is an allowed option. The silencer has to be mounted in a position where the direction of the 90° elbow outlet (direction of the hot exhausts gasses) does not harm any component of the chassis. The original design silencer end cap with 90° elbow is mandatory to be used. The original Rotax isolating mat (Rotax part nr. 297 981) is mandatory. Replacing the perforated cover and isolating mat are legal to be replaced by original Rotax parts. The isolating mat should cover the perforated cover at any time. Replacing the original rivets of the silencer end cap by 4mm metric screws and corresponding locking nuts is an allowed modification. Additional to the standard isolation mat a steel isolation mat (Rotax part nr. 297 983) of the square dimension of 165 (+10mm) is legal (not mandatory) to be assembled underneath the standard isolating mat according to the illustration below : 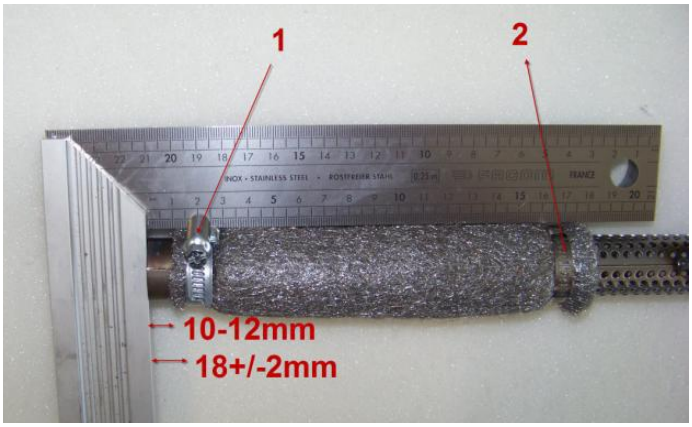 Clamp (1) must be fitted at a distance of 18 (+/-2mm), measured from the end of the tube. Clamp (2) must be fitted at the end of the perforated tube to the beginning of the steel isolating mat is a specification for assembly purpose only.

	Both clamps (1 and 2) are mandatory to be fitted and tightened. The exhaust system should be mounted to the chassis by using the two original mounting brackets. Rubber buffers are mandatory to be placed between the system and chassis. The use of maximum 4 pieces of original Rotax exhaust springs, to fix the exhaust system to the cylinder is allowed. Any other item is not allowed. Welding a socket on the top of the exhaust system for measuring the exhaust gas temperature is an allowed modification. Distance : 50-80mm from the ball joint. It should be able that a steal ball with dimension of 27,5mm can roll through the 180 degrees exhaust curve. The silencer has to fitted. Welding at the exhaust system is only allowed in case of a repair. Modifications are not allowed. The organization reserves the right at all times to change exhaust systems from the organization.
Length of inlet cone	590mm +/- 5mm
Lenght of cyndrical part of exhaust pipe	130mm +/- 5mm
Length of cone	230mm +/- 5mm (measured outside)
Outside diameter 180° elbow pipe	Maximum Ø 41mm
Diameter hole end of tube	Maximum 22,5mm
Total length of exhaust pipe	Minimum 500mm +/- 1 mm
3.41 / Exhaust restrictor	Only restrictor Rotax.nr. 273 190 including seal ring is legal to be used. The measurement (C) must be at least 15,5mm 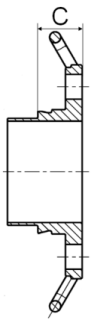
3.42 / Gear	Rear sprocket type 219. Ratio is free. Engine sprocket 11t, 12t, 13t or 14t with wording “Rotax”

3.43 / Fuel test	The organization has the reserves to test the fuel at any time.
3.44 / Fuel	It is only allowed to use fuel with a 98 octane. Checks will be done with a Digatron DT-47FT fuel tester which is calibrated in pure liquid cyclohexane. If the value (result) of the check is higher than +60 or lower than -30, the driver will be disqualified from the session. Each race the organisation will recommend a fuel station. If fuel is changed by the organisation, the driver will receive, from the designated fuel station, 98 octane fuel that is mixed with 2% CIK homologated Denicol Syn 100.
3.45 / 2-stroke oil	It is not allowed to add any product to the fuel, except CIK homologated 2-stroke oil.