BNL KARTING SERIES

TECHNICAL REGULATIONS 2020

MINI MAX

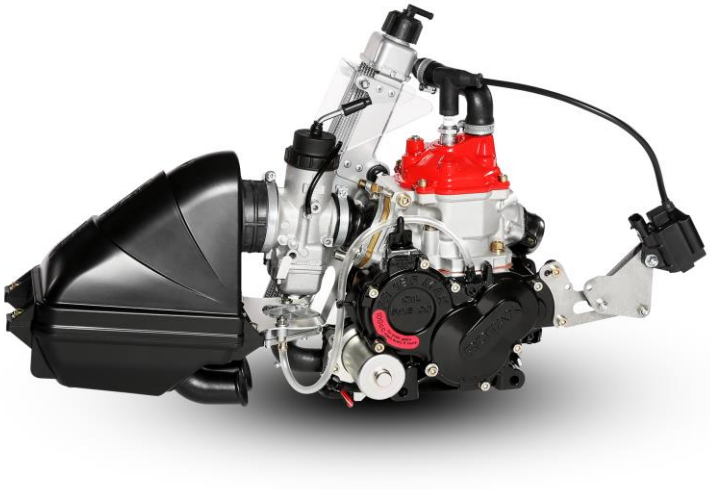

RACB - VISA T01 - BNL/B20

Technical Regulations EVO MINI MAX

2.00 / Chassis	Maximum one chassis per competitor per event (weekend). Only CIK/FIA homologated chassis ór chassis that have been manufactured by CIK/FIA homologated factories. The homologation sheet has to be available at any time. If the chassis is CIK/FIA homologated also all parts have to be used according the CIK/FIA chassis homologation. (Art.2.00 till 2.06 including)		
Wheelbase	Minimum 850mm	Maximum 950mm	
Maximum width	Maximum 120cm / measured to the outside of the rim		
Chassis pipe	Ø 28 Magnetic steel / Wall thickness 2mm ± 0,2mm		
2.01 / Brakesystem	Mechanic or hydraulic. Between the master brake cylinder and the brake pedal an extra security brake cable is mandatory. Minimum 1,8mm thickness. Also an extra security clip is mandatory at the brake pads. A ceramic brake disc is not allowed.		
2.02 / Rear axle	Magnetic material in a whole		
Diameter	Maximum Ø30mm		
Wall thickness	Minimum 4,9mm (entire length)		
2.03 / Rims	Aluminium or magnesium / diameter 5 inch		
Dry rim	115mm (tolerance +/- 6mm) measured to the outside of the rim.		
Rain rim	145mm (tolerance +/- 6mm) measured to the outside of the rim.		
	Any additions to the rims are not allowed. Except : adhesive balancing lead. Bead retaining screws are not mandatory.		
2.04 / Tyres	mojo®		
Dry	MOJO C2 CIK with barcode	Front 10x4.00x5	Rear 11x5.00x5
Rain	MOJO CW CIK with barcode	Front 10x3.60x5	Rear 11x4.50x5
	Slick race tires must be ordered in advance through the organization. (voucher system). One set of slick tires per event is allowed. (Two front and two rear tires) Tires must be mounted according to the direction of rotation defined on the tire. If it's detected on the pre-grid area that a driver has fitted his tires incorrectly (wrong direction) then he will be moved to the repair zone. The driver has the possibility to assemble his tires correctly, with the help of one (1) mechanic;.Only putting the tires in the correct direction is allowed. It is not allowed to do other technical changes. Afterwards he may start, but only when the start is given. He is not entitled to participate in the formation laps. If the observation takes place after the race, the driver will be excluded from the relevant part of the competition. It is not allowed to modify the tires. The brand name, code number, barcode and the indications always need to be visible on the tires. Only normal air is allowed to fill the tires.		
2.05 / Rearbumper	The plastic bumper must be homologated. And cover at least 2/3 of the rear wheels, and may not protude the rear tires.		

2.06 / Side-pods Front panel Front fearing	Only a complete homologated plastic spoilerset is allowed. The complete spoiler set should have the same homologation number. The homologation sheet has to available at any time. Using composite like carbon fiber is not allowed. For security reasons it is mandatory to use a front bumper with a minimum width of 82 centimeters. Only plastic frame protection parts (left, right, front) is allowed. The complete set should be free of damage. A CIK front fearing bumper is mandatory for all type of chassis and has to be mounted according the CIK regulations.
2.07 / Fuel tank	The plastic fuel tank should be mounted in a correct way, at the appropriate place. All vents must be culminate in a reservoir
2.08 / Age	From 10 years (ór reach the age of 10 in 2020) till 13 years. (13 years included)
2.09 / Weights and clothing	Minimum 120 kg on each moment of the event. Kart + complete race gear. A driver must be equipped and appear for inspection with the following gear: (see time table) Complete equipment must comply with the CIK regulations A turbo visor is allowed in case of rain Gloves which cover the entire hand High shoes that cover and protect the ankles. The responsible doctor on the event may, for safety reasons, disapprove certain types of breast, neck or rib protections. A neck protection is **mandatory.** From the moment when the driver goes on track, he must wear the mandatory race gear as described in this article.
2.10 / Race numbers	Yellow plate with black digits (Range : 101 t/m 199) (Front, rear, left and right sides)
2.11 / Data systems	Data logging with or without a GPS module is allowed. Data from the GPS module may only be saved in a system which has been mounted on the kart. Every other form of telemetry or radio communication is not allowed. Transferring data during sessions to a device, other than the data logger on board is not allowed. Power to activate the data system should be taken from a separate battery. It is not allowed to take power from the battery that is meant for the engine.
2.12 / Seat	The seat has to be fixed at minimum 4 places, 2 at the top (left and right) and 2 on the bottom (left and right) All seat supports have to be fixed with washers with a minimum thickness of 1,5mm and a diameter of 40mm
2.13 / Lead	Drivers who are lighter than the required minimum weight shall attach extra weight on their kart, until they reach the prescribed weight. Lead may only be installed on the chassis or on the seat. The Technical Scrutineering can force each driver to mount the lead on another place. The lead shall be mounted so that everyone's security is guaranteed at all times: • Up to 3kg: at least with 2x M6 bolts including washer • Up to 6kg: at least with 2x M8 bolts including washer • Up to 10kg: at least with 4x M8 bolts including washer
2.14 / Camera's	Drivers may use a camera if mounted in an appropriate way **and accepted** by the Scrutineers. Helmet cameras are not allowed. Clips, etc, for mounting a camera may not be fit on the helmet.

ENGINE – Rotax EVO MINI MAX

2.15 / Foreword	These regulations will be valid as of 1st of February 2020 and will replace all previous regulations. Only original spare parts which are manufactured by Rotax BRP are legal to be used. Any modifications are not allowed. Eventually helix reparations with heli coils and/o wire bushes are allowed.
2.16 / Engines	Each race-meeting it is allowed to enter two engines. The engines should be sealed with an official Rotax seal. The engine registration card has to be available at any time.
2.17 / Squish	Minimum 1,20mm (including possible carbon deposits)
Method of measuring	The squish gap must be measured with a certified slide gauge and by using a 2 mm tin wire (Rotax part no. 580 130). The crankshaft must be turned by hand slowly over top dead centre to squeeze the tin wire. The squish gap must be measured on the left and right side in the direction of the piston pin. Engine temperature below 30 degrees Celcius The average value of the two measurements counts.
2.18 / Combustion chamber insert	Cast identification code has to be "223 389" or "223 389 1" or "223 389 2" or 223 389 2/1" or “223 389 2/2”. Casted wording "ROTAX" and/or "MADE IN AUSTRIA" must be shown Height of the combustion chamber insert has to be **28,80mm +/- 0,2mm (H)** 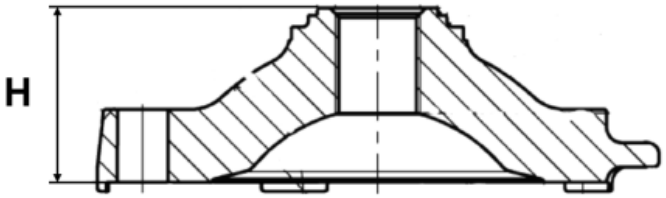

	The profile of the combustion chamber insert has to be checked with a template (ROTAX part no. 277390). The crack of light between the template and the profile of the combustion chamber insert has to be the same over the whole profile.
2.19 / Cylinder head cover	It is allowed to change the colour of the cilinderhead cover for indentification.
2.20 / Piston wih ring assembly	Original, coated, aluminium, cast piston with one piston ring. The piston has to show on the inside the cast wording "ELKO" (1) and "MADE IN AUSTRIA" (2) 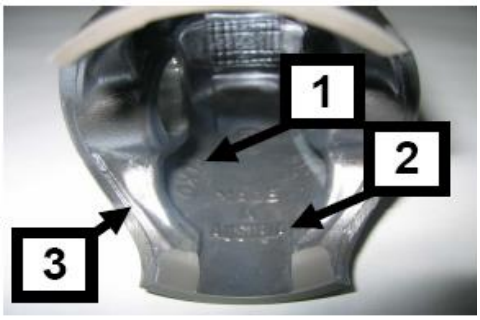 Machined areas are: • Top end of piston • Outside diameter • Groove for the piston ring • Bore for the piston pin • Inside diameter at bottom end of piston • Some pre-existing factory removal (3) of flashing at the cut out of the piston skirt. All other surfaces are not machined and have cast surface. Any mechanical treatment or rework of the piston is forbidden, (e.g. removal of carbon deposits). Cleaning without changing the original surface is allowed. If carbon is removed it must be consistently removed across the entire surface without altering the profile of the piston itself. Example : selectively removing carbon in the squish measurements areas is forbidden.

Piston ring	Original, magnetic, rectangular piston ring. Ring height : 0,98 +/- 0,02 mm. Piston ring is marked either with "Rotax 215 547", "Rotax 215 548", Rotax 215 548 X, or “I ROTAX 215548 X The piston ring is legal also if just parts of the marking are still visible.
2.21 / Piston pin	Piston pin is made out of magnetic steel. Dimensions must be according to the drawing. The minimum weight of the piston pin must not be lower than : 31,00 grams 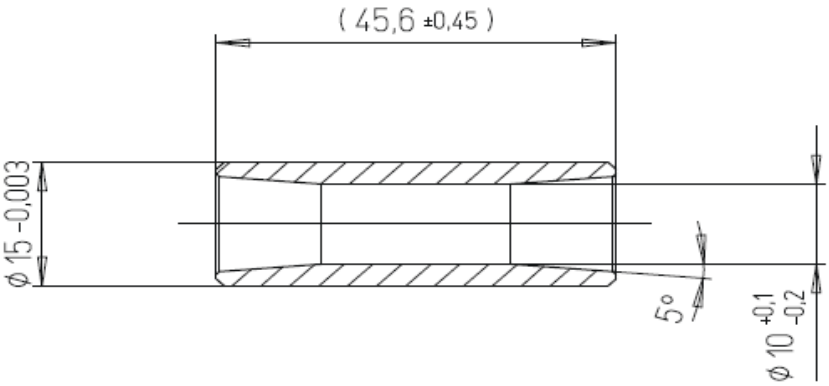
2.22 / Cylinder	Cylinder types >2017, Rotax partnr.: 223994 marked with the letter **“J” are the only types that are allowed. All other typers are banded.** The central boost port and exhaust port may show factory machining. See pictures below : 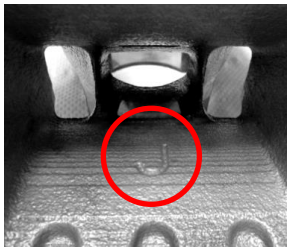 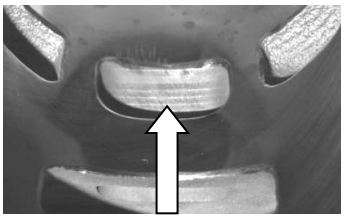 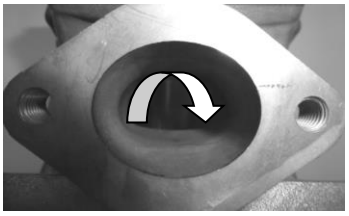
2.23 / Maximum bore	54,035mm (measured 10mm above the exhaust port)

2.24 / Cylinder measurements

Height of cylinder should be 87mm (-0,05 / + 0,10mm)

Exhaust port timing
The "exhaust port timing" (distance from the top of the cylinder to the top of the exhaust port) has to be checked by means of the template (Rotax part no. 277 402).

Insert the template for Junior Max cylinder into the cylinder, and move the template (at the highest point of the exhaust port) as far as possible into the exhaust port.

In this position the template may not touch the cylinder wall (nikasil).

The horizontal and vertical dimensions of the exhaust port with fully CNC machined exhaust port only) have to be checked with the template (Rotax part no. 676 240).

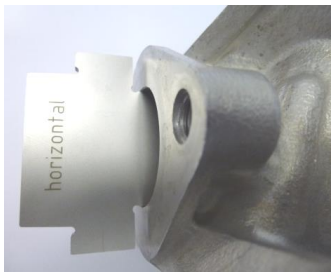

The template has to be moved in horizontal and vertical position as far as possible into the exhaust port. In both directions the template may not touch the exhaust socket flange.

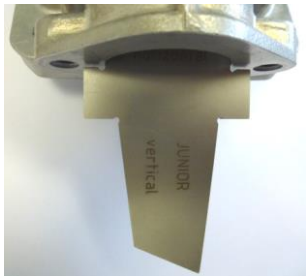

All transfer ports and passages have cast finish surface except some removal (done by the manufacturer) of cast burr at the inlet passage, exhaust port and passages.

Any modification is strictly forbidden!

Cylinder measurements	All ports have chamfered edges. See picture. 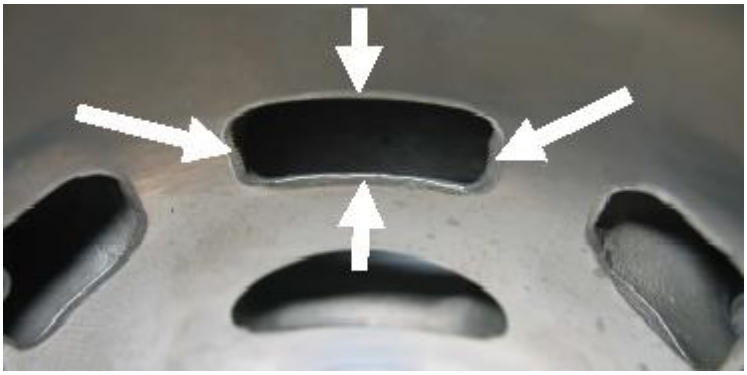 The top edge of the exhaust port may show either just a cast finish surface or signs of a CNC machining or signs of CNC machining in combination with signs of manual grinding The flange for the exhaust socket may show machined surface. Machined surface can be either flat or show a circular sealing bump. 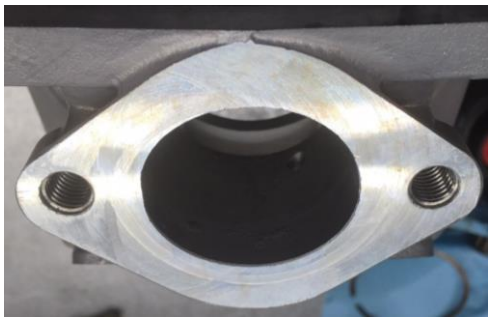
2.25 / Inlet system	The inlet manifold is marked with the name ROTAX and identification code 267915 of 267916 Some factory flash removal may be present at the conjunction of the inside contour and the carburettor stop mounting face. No additional grinding or machining is permitted.

The reed valve assy. is equipped with 2 petal stops and 2 reeds, each having 3 petals. The thickness of the reeds is 0,60 mm +/- 0,10mm.

Modification is not allowed.

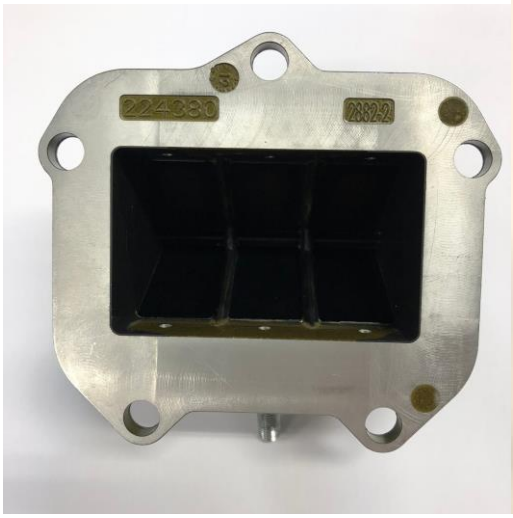

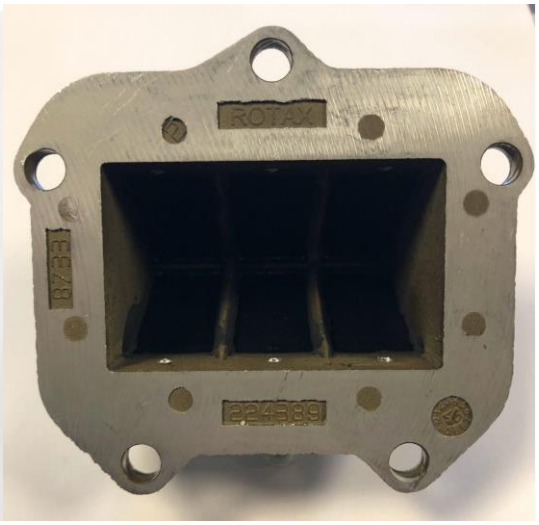

Both reed valve assy. are legal to be used.

Rotax part no. 224 380 (left picture)
Rotax part no. 224 389 (right picture)

2.26 / Conrod/crankshaft

Stroke: 54,5mm ± 0,1mm
Conrod has to show forged numbers “367” or “362”
(see pictures)

Shafts of conrods are not machined. Grinding or polishing of shaft of conrod is not permitted.

Crankshaft has to be unprocessed and may not be damaged.

Ignition signal on crankshaft :

Fit the template (Rotax part no. 277 391) on the crankshaft. Align the hole in the template for the big end pin with the big end pin of the crankshaft. The two edges of the signal machining on the crankshaft must be in line (+/-0,5mm) with the corresponding edges (MAX) of the template.

2.27 / Balance shaft / drive	Balance shaft and balance gears must be installed. Configuration of part (Rotax part nr. 237 949) only is legal. Surface (1) is not machined and must show cast surface. Measurement from centre of balance shaft to outer diameter of fly weight of balance shaft at defined length must not be lower than specified : (21,50mm) see drawing. The minimum weight of the dry balance shaft must not be lower than: 255 gram for balance shaft. (Rotax part nr. 237 949) 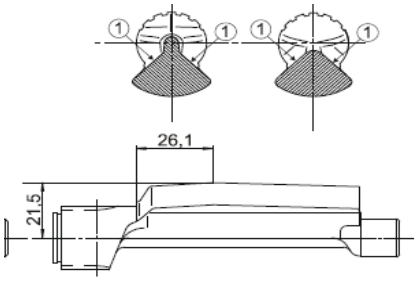 **Balance drive** Balance gears must be installed and must be aligned according to the instruction in the repair manual. Timing of the balance gears should be at any time correct as shown in the image below (see 6) Only the balance gears (Rotax part nr. 234 435 (8,8mm width) are legal to be used. 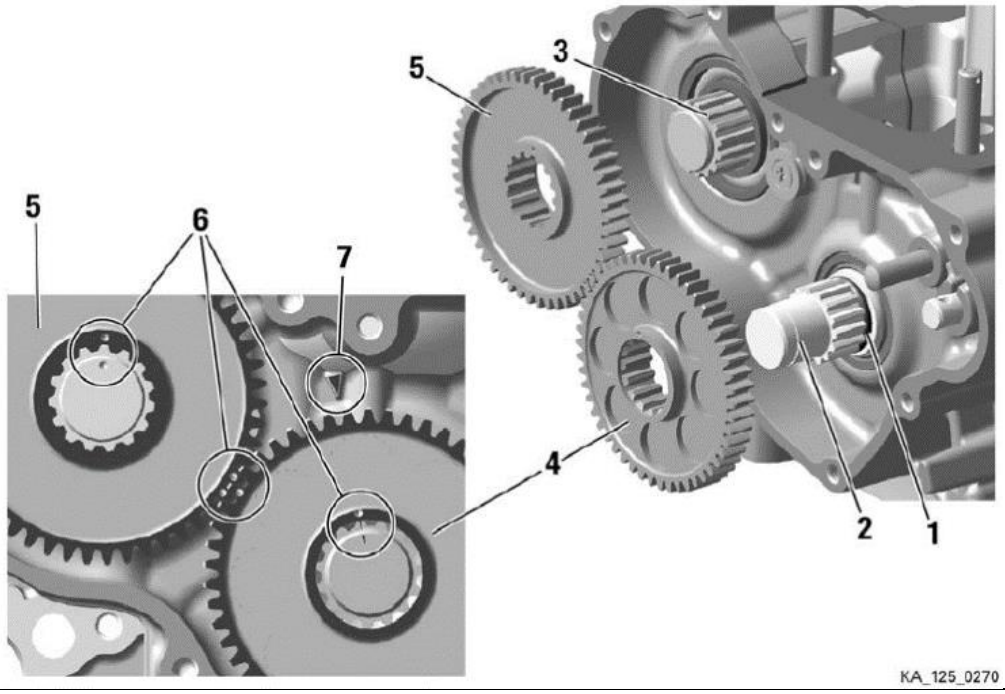
2.28 / Crankcase	As supplied by the manufacturer. No grinding/polishing is permitted in the two main transfer passages as well as in the crank area. Uncoated as well as black coated crankcases are legal to be used.
2.29 / Crankshaft main bearings	Crankshaft main bearing 6206 from FAG is allowed only. The bearings must be marked with 579165BA or Z-579165.11.KL (see picture)

2.30 / Ignition system

Ignition coil with separate electronic ECU box (Rotax part nr. 666 818). The ECU box is still legal to be used if the sticker is removed.
Ignition coil and ECU box have to be fitted with all components according to the illustrations below.
Two different mounting versions (left illustrations and right illustration) are legal.

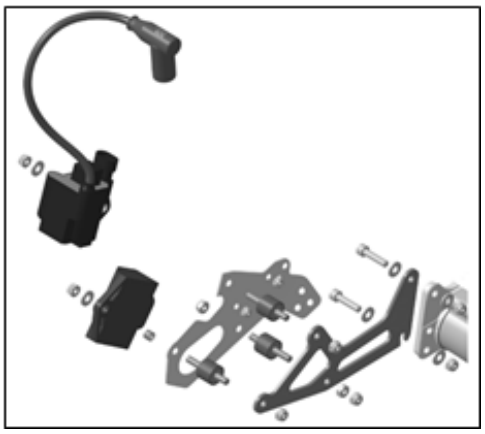

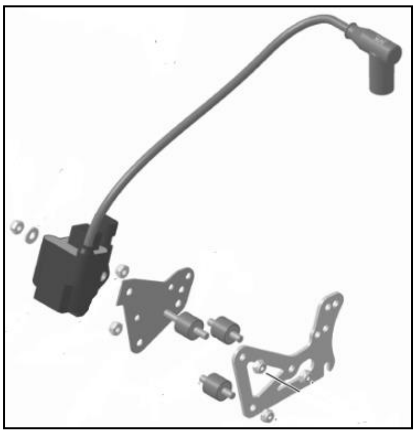

At the mounting version as shown in the left illustration, the ground cable of the cable harness has to be connected to the lower rubber buffer of the support plate. Removing the black coating of the gearbox in specific areas, for mass connection between cable harness and engine, is a legal modification.
In case the mounting bracket is in conflict with a chassis component, the additions of 2 spacers, one per mounting hole, with a maximum thickness of 20mm between the mounting bracket and the gearbox cover is allowed.

The visual appearance of the ignition coil must be identical with the pictures below:

Ignition coil must show two pins at the terminal. The ignition coil is labelled with two stickers : “BRP 666820” and “NIG 0105”. The ignition coil is still legal to be used if one or both stickers disappeared.

The minimum length of the high tension cable of the ignition coil is 210mm (from outlet of ignition coil to outlet of spark plug connector = visible length of cable)

The organization reserves the right at all times to exchange ignitions coils and / or ECU boxes with ignition coils and or ECU boxes from the organization.

Ignition system	The ECU box can be checked with the ECU box tester (Rotax nr. 276 230) Start the test by pressing the button ✓ . After approx. 3 seconds the type of ECU box that is actually testes will be indicated in the second line of the display. After aprrox. 30 seconds the result of the test will be indicated in the first line of the display. The ECU box tester has to indicate following results: **125 MINI MAX category** 1. 666818MINI 2. !! Test OK !! The marking of the pick-up must show the following numbers in the first line : 029600-0710 followed by a variable production serial number. Additional gasket, Rotax 431 500, gasket thickness = 0,8 mm Maximum two gaskets (Rotax 431 500) are allowed to be fitted. It is not necessary to install any additional gaskets with the exception of the rubber sealing ring on crankcases with the machined sealing surface for the pick-up sensor.
2.31 / Spark plugs / Caps	Following spark plugs are legal to be used : NGK GR8DI / NGK GR9DI Merk : Denso Iridium IW 24 / 27 / 29 / 31/ 34 Electrode distance maximum 1,20 mm 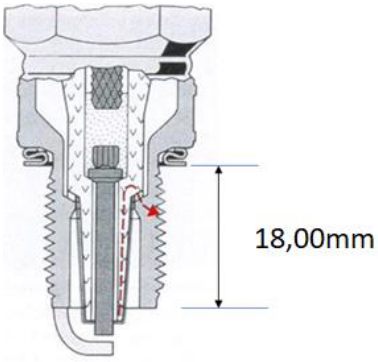 Maximum spark plug shaft including ring : 18,00mm. Two versions of spark plug caps are legal to be used : Version 1. Black, marked with “NGK TB05EMA” Version 2. Red, marked with “NGK”

2.32 / Battery

Original batteries with following specifications are legal to be used :

- Rotax type RX7-12B
- Rotax type RX7-12L (lithium iron phosphate type)
- YUASA YT7B-BS

Specifications of the batteries should be readable at all times.

Battery must be fitted with the original battery clamp and battery cover (pictures below) and must be fixed to the chassis with both clamps (4 screws). Battery clamp must be mounted on the left side of the seat.

1 Evo

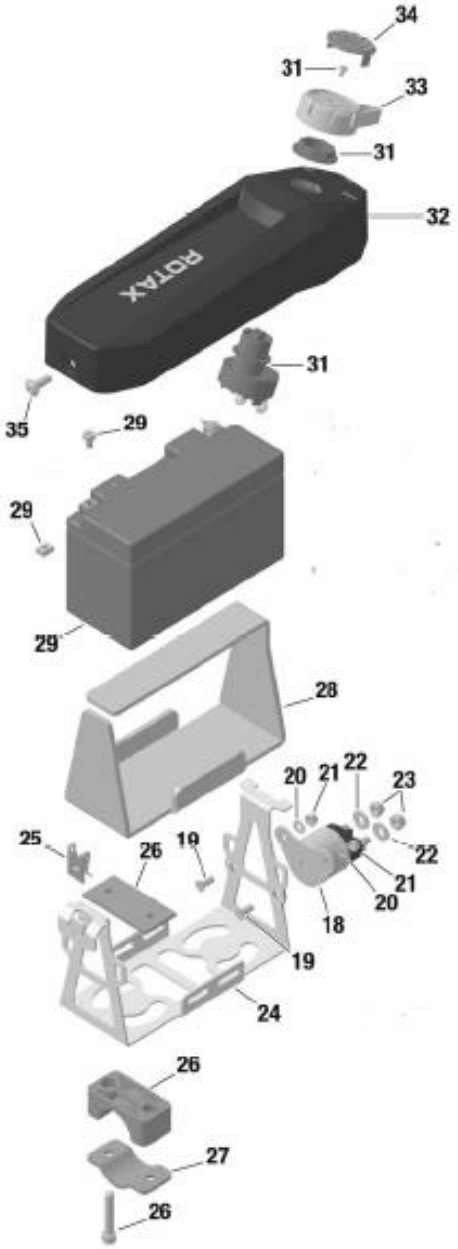

2 Evo

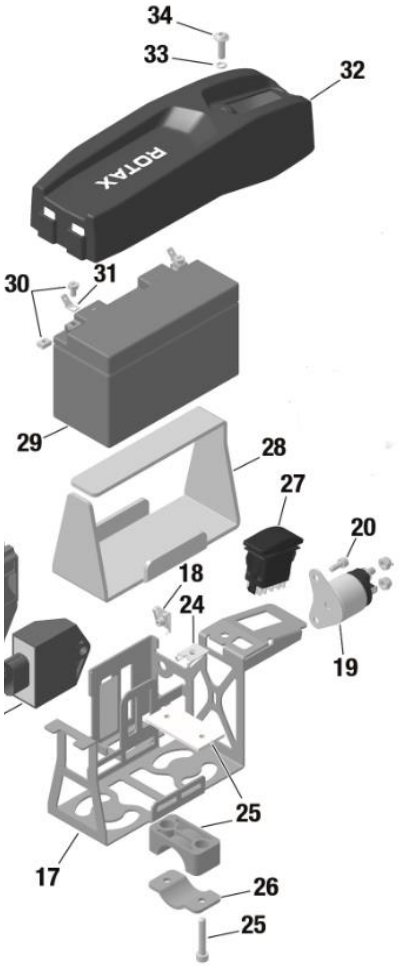

It is an allowed option to mount rubber buffers (4 pieces) between 24 en 26 (left picture)
It is an allowed option to mount rubber buffers (4 pieces) between 17 and 25 (right picture)

Only original plugs from the Rotax wiring harness are legal to be used.

2.33 / Carburettor

DELLORTO Type VHSB 34. Housing has to show the cast wording “VHSB 34”. Carburettor housing is stamped with “XS”.

The complete inlet bore of the carburettor must show cast surface.
Carburettor slide shows digits “45” in casting

Following specifiacations:

- Carburettor venturi insert 12,5.
- Needle jet stamped with “DP267”.
- Jet needle stamped with “K57”.
- Start jet stamped with “60”.
- Idle jet stamped with “60”.
- Idle emulsion tube stamped with “45”.
- Float lever according template (Rotax part nr. 277 400.)
- Floats marked “4,0 gr” are legal to be used only.
- Needle valve assembly stamped “150”. Needle of needle valve marked with diamond symbol “INC” only.
- All jets must be correctly seated and securely fitted at any time (tightened)!
- Settings of the carburettor adjustment screws (idle and idle air) are free.
- Settings of main jets is free.
- Optional carburettor plug (Rotax part nr. 261 030) is legal to be used.
- Using the fuel sieve in the carburettor is not mandatory. (see picture)

Only original Dellorto parts are legal to be used.

See checklist DELLORTO for further info.

Carburettor

Only the red moulded plastic throttle body restrictor (Rotax part no. 267 536) must be installed in the rear of the carburettor and in the correct orientation at all times.

No modifications are allowed. The ribbed surface on the inlet is to help ensure dimensions have not been modified.

Max distance = 35,0 mm 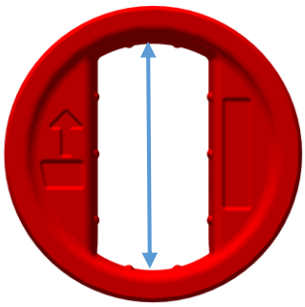		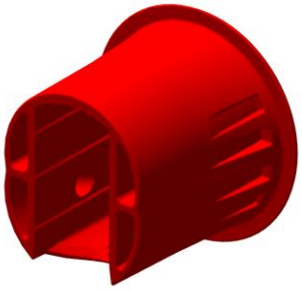
Max distance = 18,0 mm 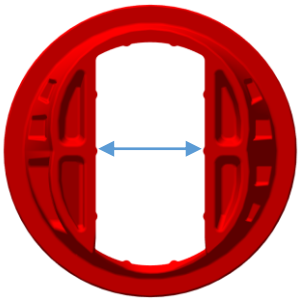	Min length = 35,0 mm	

2.34 / Fuel pump	MIKUNI fuel pump, type DF 44-210 is mandatory. Fuel pump must be mounted on the bottom side of the support bracket for the intake silencer
2.35 / Fuel filter	It is **not mandatory** to mount a fuel filter, but if a fuel filter is mounted only the version showed in the picture below is allowed. Rotax part nr. 274 161. Except the fuel line, the fuel pump and the original fuel filter no additional parts are legal to be mounted between the fuel tank and carburettor.
2.36 / Radiator	Only the original radiator, with (ROTAX part nr. 295 923) is legal to be used. Cooling area : Height: 280 mm / 300 mm Width: 58 mm / 62 mm Thickness of radiator: 30 mm / 34 mm 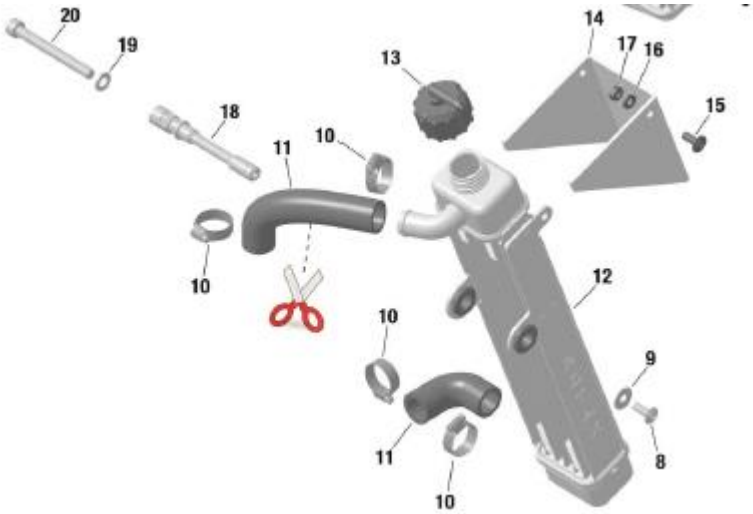 The removal of the thermostat from the cylinder head cover is an allowed modification. Radiator must be mounted with all components. The removal of the radiator flap is an allowed option. To apply tape (neutral tape without advertising only) around the radiator is an allowed modification to control the air flow through the radiator. Using a plate to control the air flow is not an allowed option. Tape may not be removed or loosen from the radiator during operation on the track. Any other non-original device to control the air flow through the radiator is prohibited. The radiator has to be mounted on the right side of the engine.

2.37 / Engine coolant	Plain water without any additives has to be used. The venting of the radiator should end in a reservoir.
2.38 / Clutch	Engagement speed of centrifugal clutch at maximum 4.000rpm (the kart without driver must start to move). Latest clutch version. 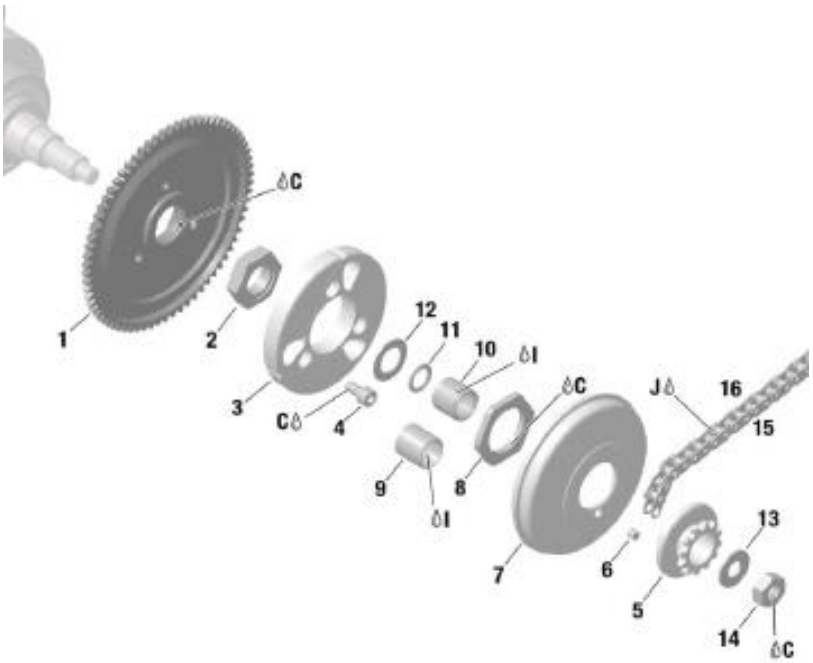 Only original Rotax clutch parts with Rotax logo are legal to be used. Clutch Rotax part nr. 659 907 Clutch must be mounted with bearing 15x19x17 (Rotax part nr. 632 415) including O-ring (Rotax part nr. 950 815) Signs of any emulsion from the needle/plain bearing into the clutch drum may not exceed the picture below. Contact area between clutch and clutch drum has to be dry at any time. No lubrication allowed.

Clutch

Clutch specifications at any time :

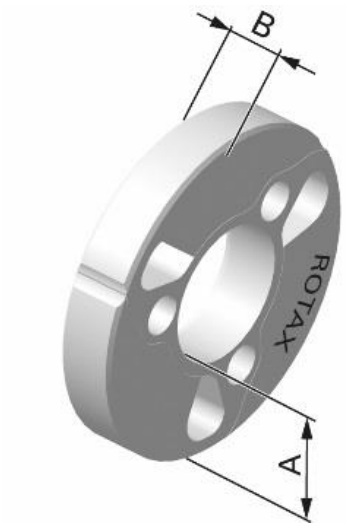

Thickness of clutch shoe (A) :
minimum : 24,10 mm

Measurements must be done at the 3 open ends of the clutch, 5 – 10 mm from the machined groove (all clutch shoes must be completely closed at measurement – no gap).

Height of clutch (B) :
Minimum : 11,45 mm

Clutch drum : (Rotax part nr. 659 930 and Rotax part nr. 659 937) are legal to be used.

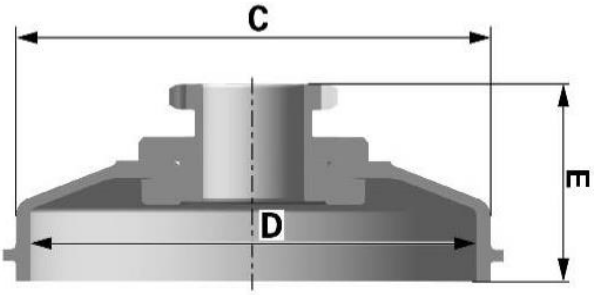

The outer diameter of the clutch drum (C) : minimum 89,50mm. Diameter has to be measured with a sliding calliper just beside the radius from the shoulder. (Not at the open end of the clutch drum).

The inner diameter of the clutch drum (D) : maximum 84,90mm. The inner diameter has to be measured with a sliding calliper. The measurement has to be done in the middle of the clutch drum (in the contact area between clutch and clutch drum).

Clutch drum height with sprocket (E) : minimum : 33 mm

2.39 / Airbox

Intake silencer with integrated, washable air filter has to be used with all parts. and has to be mounted, in the original shape, on the support bracket with two screws (in dry and wet conditions).

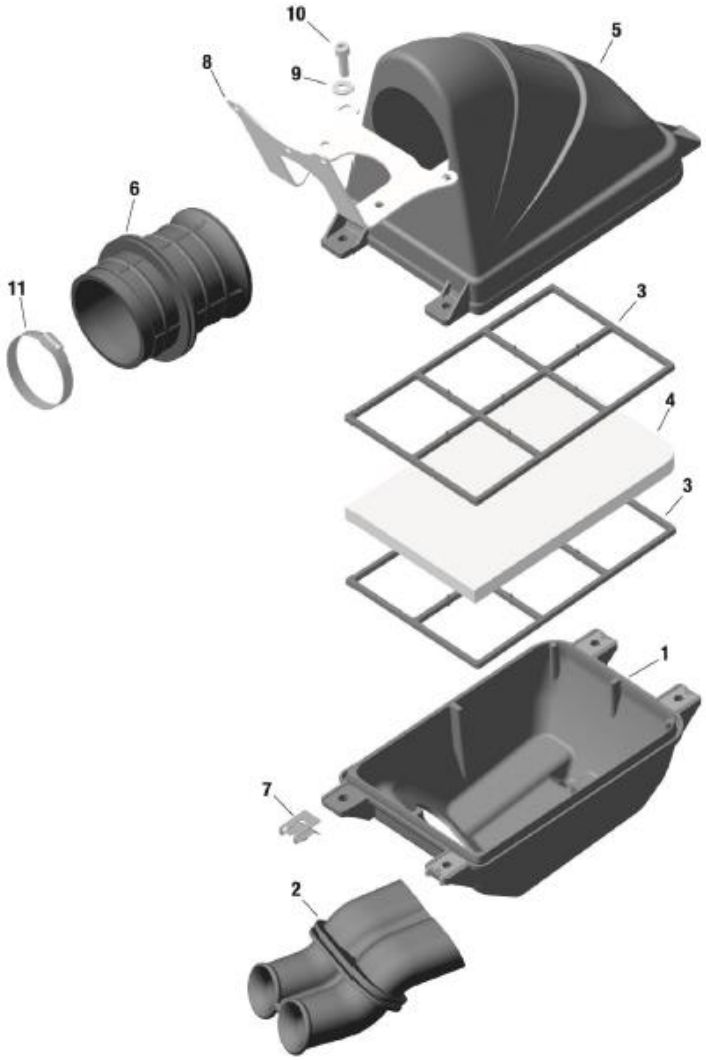

Intake silencer tube (pos2) and carburettor socket (pos 6) are marked with the wording “Rotax”.
Intake silencer case bottom is marked on the inside with the Rotax part nr. 225 015.
Intake silencer case, top is marked on the inside with the Rotax part nr. 225 025

The ‘TWIN AIR” filter element is mandatory to use. (see picture)

Using elements with the wording “Aprillia” is not allowed !

2.40 / Exhaust system

A specific exhaust system has to be used for the 125 Mini MAX engine.
Rotax part nr. 273 137
The exhaust external body is a common component to Micro MAX, but with alternative internal components (Inserts).
The silencer must be mounted in a position where the direction of the 90° elbow outlet (direction of the hot exhaust gasses) does not harm any component of the chassis.

The measurements in the diagram below are as follows:
(a) 580 mm +/- 5mm
(b) 299 mm +/- 5mm
(c) 42 mm +/- 3mm

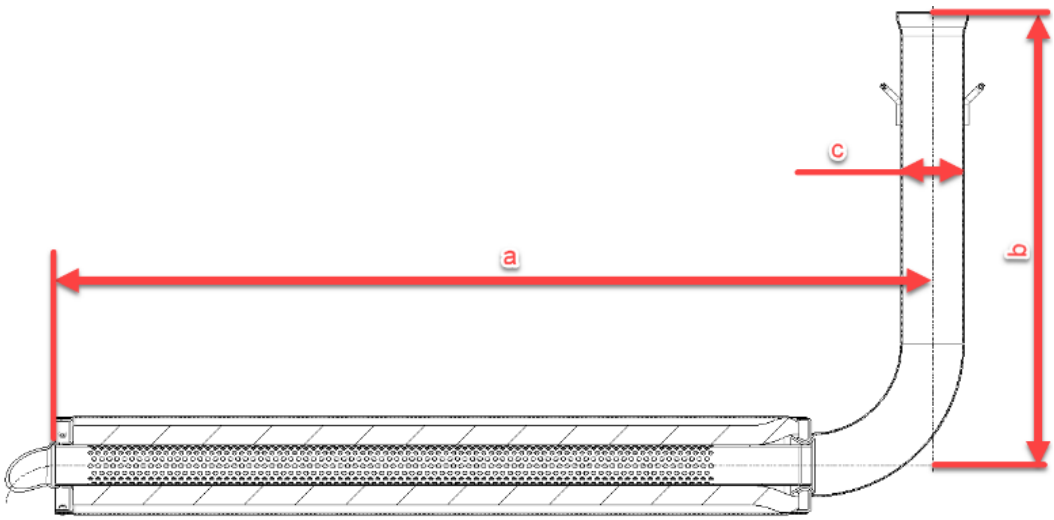

A steel ball with a 28.0mm diameter must not pass through Section “A” and a steel ball with a 26.0mm diameter must be able pass through Section “A” in the below diagram from the inlet and through the 90-degree elbow completely. (Internal exhaust components must first be removed)

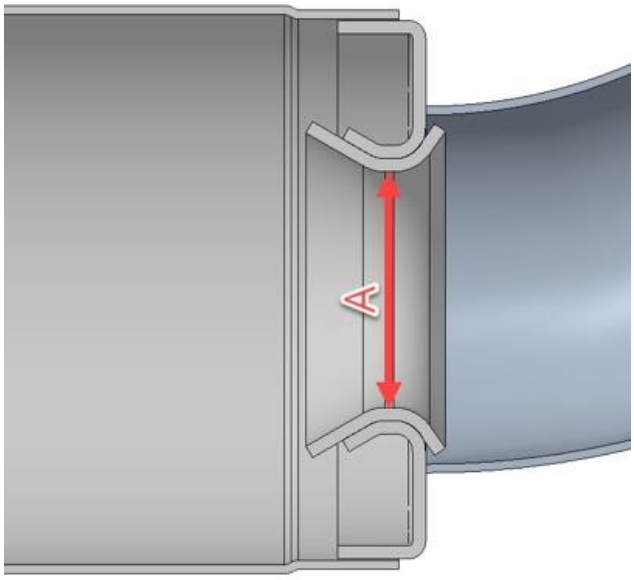

The inner measurement of the exhaust system silencer end (a) in the below diagram must be a maximum of 63.0 mm.

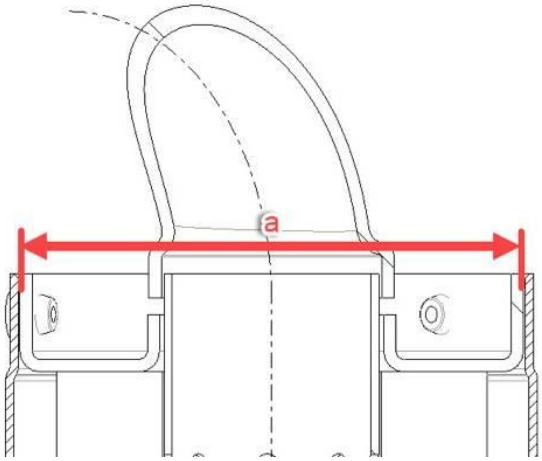

(Note: this is not a measurement of the perforated tube)

The exhaust must be mounted to rigid mounts using 2 ROTAX silent blocks. (Rotax part nr. 660 920 and/or Rotax part nr. 260 657 are allowed).
The deflection of the 2 silent blocks is the only exhaust movement allowed.
The exhaust must be mounted in a neutral position with no stress on the 2 silent blocks.

Mini MAX Perforated tube
ROTAX part nr. 273 211

The measurements in the diagram below are as follows:
(a) at least 498 mm
(b) minimum outside diameter of 61mm
(c) maximum outside diameter of 26mm
(d) minimum length 63mm

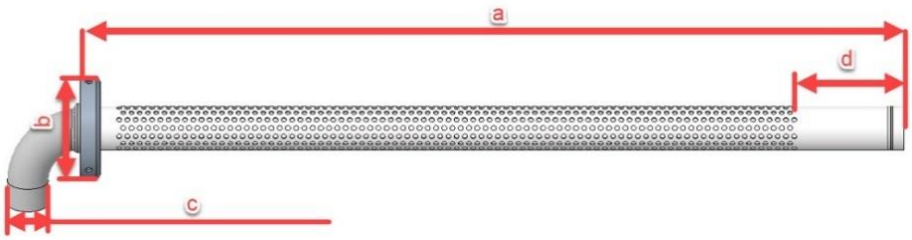

Note:
Mini MAX perforated tube has a stamped ID marker “ X “ visible externally.

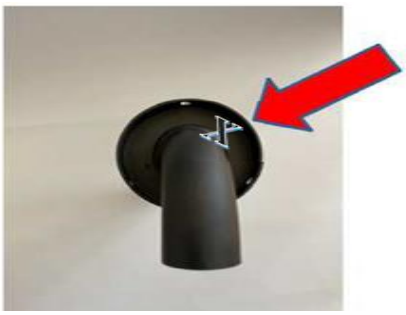

The only legal isolation matting for Mini MAX is: ROTAX part nr. 297 985
The steel isolation matting Rotax part nr. 297 983 is not allowed to be used.

New size minimum 490 x 180mm (+/-10mm)
New weight 141gr (119g – 163g)
Used weight minimum 110g

NOTE:
The only exhaust system allowed for racing in the Mini MAX category is the MY2020 version.
The exhaust has 3 clear visual differences to identify the MY2020 version. (see pictures below)

1. Exhaust hooks
2. Connecting socket / ball joint connect at manifold
3. Wall thickness of the exhaust system is 1.0mm (older exhaust system which is not allowed for racing has a wall thickness of 1.5mm)

Welding a socket (in a distance of 50-80 mm from the ball joint) on the top of the exhaust system for measuring the exhaust gas temperature is an allowed option.

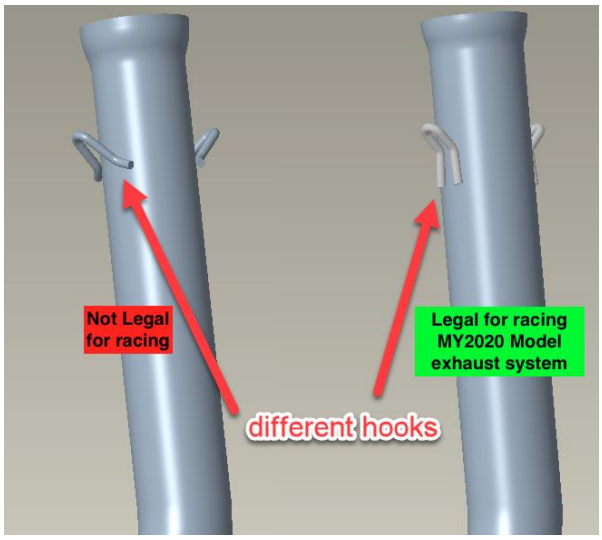

	Each entrant has to buy a new isolation matting through the organization during registration (voucher system). During scrutineering all mechanics have to come with a dismounted and disassembled, without isolation matting, exhaust to the Scrutineer. The exhaust has to be proper and clean. The exhaust must be fitted with this new isolation matting in the presence of the technical scrutineer. Once the isolation matting is fitted, the exhaust will be sealed with a barcode seal. Also the racenumber of the driver will be marked on the exhaust. All exhausts stay in the Parc-Ferme area during the event.
2.41 Exhaust restrictor	Only exhaust restrictor (Rotax part nr. 273 194) including seal ring is legal to be used. Gasket (Rotax part nr. 250 271) is mandatory between exhaust restrictor and cylinder and has to seal perfectly. Diameter (A) must apply for a length (B) of at least 16,80 mm Inner diameter (A) of exhaust sockets is : 22mm +0,3 / -0,3 mm. B measurement : minimum 16,80 mm C measurement : minimum 18,50 mm 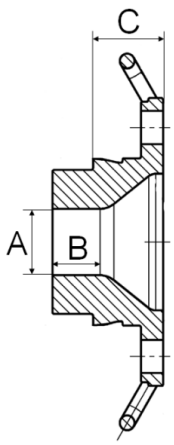 Modification is not allowed. The internal profile of the exhaust socket has to be checked with the template, Rotax 277 405. Fit the template (**125 Mini MAX** “22 mm”), as far as possible into the exhaust socket (without gasket, carbon deposits removed). There has to be a constant crack light between the profile of the exhaust socket and the profile of the template. 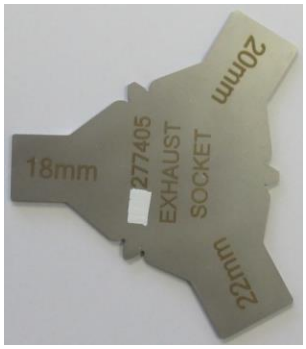
2.42 / Gear / Sprocket	Rear sprocket type 219. Engine sprocket : 13t with original Rotax logo Rear sprocket : 80t
2.43 / Fuel test	The organization has the right to test the fuel at any time.

2.44 **Fuel**	It is only allowed to use fuel with 98 octane. Checks will be done with a Digatron DT-47FT fuel tester which is calibrated in pure liquid cyclohexane. If the value (result) of the check is higher than +60 or -30 the driver will be disqualified from the session. Each race the organisation will recommend a fuel station. If fuel is changed by the organisation, the driver will receive, from the designated fuel station, 98 octane fuel that is mixed with 2% Denicol Syn 100.
2.45 / **2-stroke oil**	It is not allowed to add any product to the fuel, except CIK 2-stroke oil.