2022 BNL KARTING SERIES

Technical Regulations DD2 /DD2 Master

VISA RCB SPORT N°

Technical Regulations ROTAX DD2 /master

6.00/ Chassis	Maximum one chassis per competitor per event (weekend). CIK-FIA homologated chassis and DD2 certificated chassis are allowed. Check www.rotax-kart.com / approved chassis DD2. If the chassis is CIK/FIA homologated also all parts have to be used according the CIK/FIA chassis homologation. (Art.6.00 till 6.06 including)		
6.01/ Brakesystem	Only hydraulic, CIK/FIA homologated brakes are allowed. The homologation sheet has to be available at any time. Front brakes are mandatory. Between the master brake cylinder and the brake pedal an extra security brake cable is mandatory. Minimum 1,8mm thickness. Also an extra security clip is mandatory at the brakepads. A ceramic brake disc is not allowed.		
6.02/ Rear axle			
Diameter	Ø40mm	magnetic material, in a whole.	
Wall thickness	Minimum 2,9mm (entire lenght.)		
6.03/ Rims	Aluminium or magnesium/diameter 5 inch		
Dry	Maximum 135/215mm / measured to the outside of the rim		
Rain	Maximum 130/180mm +/- 5mm / measured to the outside of the rim		
Rear width	Maximum 140cm / measured to the outside of the rim Minimum : see 6.05 “rear bumper”		
	Any additions to the rims are not allowed. Except : adhesive balancing lead. Bead retaining screws are mandatory.		
6.04/ Tyres	mojo®		
Slicks	MOJO D5 CIK with barcode	Front: 4,5x10x5	Rear: 7,1x11x5
Rain	MOJO W5 CIK with barcode	Front: 4,5x10x5	Rear: 6,0x11x5
	Slick race tyres must be ordered in advance through the organisation (voucher system) Two sets of slick tyres are allowed for each meeting. It is allowed to mix the tyres during the event. (BNL Karting Series championship). One set of slick tyres is allowed for the BNL Kick-Off. Tires must be mounted according to the direction of rotation defined on the tire. If it’s detected on the pre-grid area that a driver has fitted his tires incorrectly (wrong direction) then he will be moved to the repair zone. The driver has the possibility to assemble his tires correctly, with the help of one (1) mechanic only putting the tires in the correct direction is allowed. It is not allowed to do other technical changes. Afterwards he may start, but only when the start is given. He is not entitled to participate in the formation laps. If the observation takes place after the race, the driver will be excluded from the relevant part of the competition. It is not allowed to modify the tires. The brand name, code number, barcode and the indications always need to be visible on the tires. Only normal air is allowed to fill the tires.		

6.05/ **Rearbumper**	Rotax rear bumper and CIK-FIA homologated rear bumper is legal to be used. Rotax rear bumper : Rollers orange or red are allowed to be used. 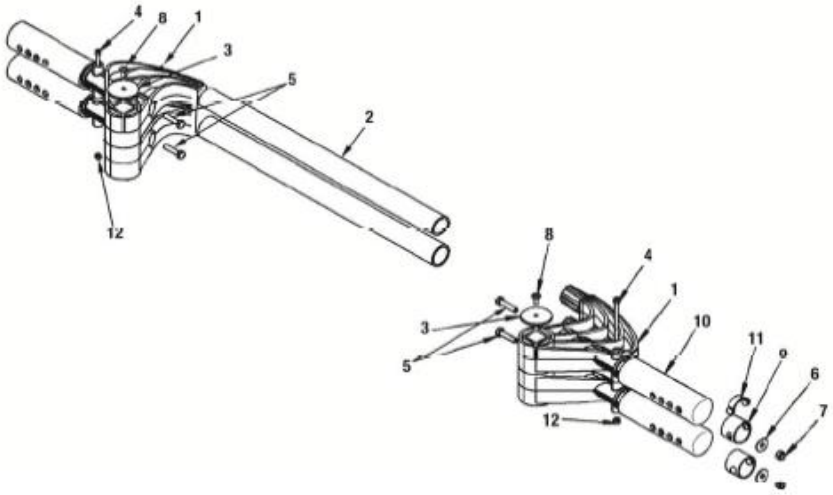 **All** parts from the rear bumper should be mounted. No part shall be added or removed from original content (except safety wire or bolt connection between pos. 1 and pos. 2 as well as number plate with support). Rotax original (orange or red) protection rollers only are allowed to be used. CIK rear bumper : cover at least 2/3 of the rear wheels, and may not protrude the rear tyres.
6.06/ **Side-pods** **Front panel** **Front fearing**	Only a complete CIK homologated spoiler set is allowed. The complete spoiler set, should have the same homologation number. The homologation sheet has to be available at any time. Using composite like carbon fiber is not allowed. Only plastic frame protection parts (left, right, front) is allowed. The complete set should be free of damage. A CIK front fearing bumper is mandatory for all type of chassis and has to be mounted according the CIK regulations.
6.07/ **Fuel tank**	The plastic fuel tank should be mounted in a correct way, at the appropriate place. All vents must culminate in a reservoir.

6.08/ Weight and clothing	DD2: 175 kg. Kart + complete race gear. DD2 Master: 175 kg + complete race gear. Complete equipment must comply with the CIK regulations A turbo visor is allowed in case of rain Gloves which cover the entire hand High shoes that cover and protect the ankles. The responsible doctor on the event may, for safety reasons, disapprove certain types of breast, neck or rib protections. A neck protection is not required yet recommended From the moment when the driver goes on track, he must wear the mandatory race gear as described in this article.
6.09/ Race numbers	DD2: Yellow plate with black digits (Range : 401 t/m 499) DD2 Master: Yellow plate with black digits or Green plate with white digits (Range : 501 t/m 599) (Front, rear, left and right sides)
6.10/ Data Systems	Data logging with or without a GPS module is allowed. Data from the GPS module may only be saved in a system which has been mounted on the kart. Every other form of telemetry or radio communication is not allowed. Transferring data during sessions to a device, other than the data logger on board is not allowed. Power to activate the data system should be taken from a separate battery. It is not allowed to take power from the battery that is meant for the engine.
6.11/ Seat / Extra seat support	The seat has to be fixed at minimum 4 places, 2 at the top (left and right) and 2 on the bottom (left and right) All seat supports have to be fixed with washers with a minimum thickness of 1,5mm and a diameter of 40mm. On the engine side maximum one additional seat support is allowed to be used. The additional seat support must be fastened to the engine using the threaded hole designed for this purpose.
6.12/ Lead	Drivers who are less than the required minimum weight shall attach extra weight on their kart, until they reach the prescribed weight. Lead may only be installed on the chassis or on the seat. The Technical Scrutineering can force each driver to mount the lead on another place. The lead shall be mounted so that everyone's security is guaranteed at all times: • Up to 3kg: at least with 2x M6 bolts including washers • Up to 6kg: at least with 2x M8 bolts including washers • Up to 10kg: at least 4x M8 bolts including washers
6.13/ Camera	Drivers may use a camera if mounted in an appropriate way and accepted by the Scrutineers. Helmet cameras are not allowed. Clips, etc, for mounting a camera may not be fit on the helmet.

Engines – Rotax DD2 EVO

6.14 / Foreword	These regulations will be valid as of 1st of February 2022 and will replace all previous regulations. Only original spare parts which are manufactured by Rotax BRP are legal to be used. Any modifications are not allowed. Eventually helix reparations with heli coils and/or wire bushes are allowed.
6.15 / Engines	Each race-meeting it is allowed to enter two engines. The engines should be sealed with an official Rotax seal. The engine registration card has to be available at any time.
6.16 / Squish	Minimum 1,30mm (including possible carbon deposits)
Method of Measuring	The squish gap must be measured with a certified slide gauge and by using a 2 mm tin with (Rotax part no. 580 130). The crankshaft must be turned by hand slowly over top dead centre to squeeze the tin wire. The squish gap must be measured on the left and right side in the direction of the piston pin. Engine temperature below 30 degrees Celsius The average value of the two measurements counts.
6.17 / Combustion chamber insert	Cast identification code has to be "223 389" or "223 389 1" or "223 389 2" or 223 389 2/1" or "223 389 2/2". Casted wording "ROTAX" and/or "MADE IN AUSTRIA" must be shown.   Height of the combustion chamber insert has to be **28,80mm +/- 0,2mm (H)** 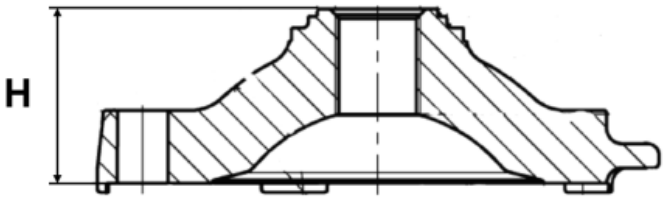

The profile of the combustion chamber insert has to be checked with a template (ROTAX part no. 277 390). The crack of light between the template and the profile of the combustion chamber insert has to be the same over the whole profile.

6.18 / Cylinder head cover

It is allowed to change the colour of the cilinderhead cover for indentification.

6.19 / Piston with ring assembly

Original, coated, aluminium, cast piston with one piston ring. The piston has to show on the inside the cast wording "ELKO" (1) and "MADE IN AUSTRIA" (2)

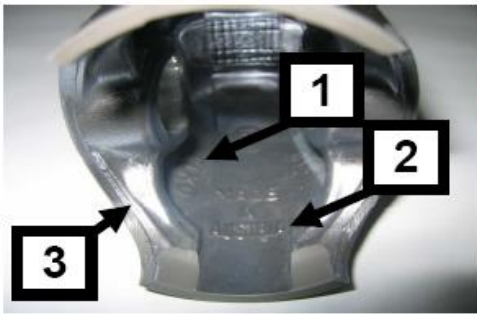

Machined areas are:

- Top end of piston
- Outside diameter
- Groove for the piston ring
- Bore for the piston pin
- Inside diameter at bottom end of piston
- Some pre-existing factory removal (3) of flashing at the cut out of the piston skirt.

All other surfaces are not machined and have cast surface.
Any mechanical treatment or rework of the piston is forbidden, (e.g. removal of carbon deposits).
Cleaning without changing the original surface is allowed.
If carbon is removed it must be consistently removed across the entire surface without altering the profile of the piston itself.

Example : selectively removing carbon in the squish measurements areas is forbidden.

Piston ring	Original, magnetic, rectangular piston ring. Ring height : 0,98 +/- 0,02 mm. Piston ring is marked either with "Rotax 215 547", "Rotax 215 548" , “Rotax 215 548X “ or “I Rotax 215 548X” The piston ring is legal also if just parts of the marking are still visible. 
6.20 / Piston pin	Piston pin is made out of magnetic steel. Dimensions must be according to the drawing. The minimum weight of the piston pin must not be lower than : 31,00 grams 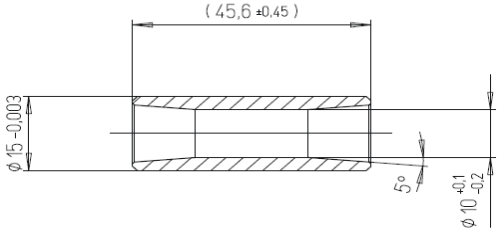

6.21 / Cylinder	Cylinder with one main exhaust port and two side exhaust ports and exhaust valve. Cylinder has to be marked with identification code 613 933 and ROTAX logo. Any additional machining or re-plating is not permitted.  Type >2018 DD2 cylinder 613 933 marked with capital "**X" in the inlet port is allowed**, but not mandatory. **Single core cylinder :**  Red surrounded picture below : NOT CNC machined  White surrounded picture below : CNC machined 

The exhaust port is CNC machined but not over the entire length

No single core cylinder :

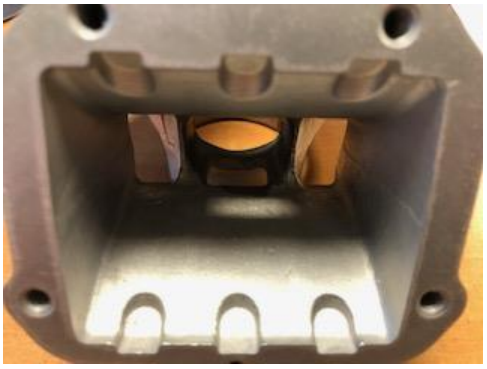

Red surrounded picture below : NOT CNC machined.

White surrounded picture below : CNC machined

The exhaust port is CNC machined but not over the entire length

All transfer ports and passages have cast finish surface except some removal (done by the manufacturer) of cast burr at the inlet passage, exhaust port and passages.

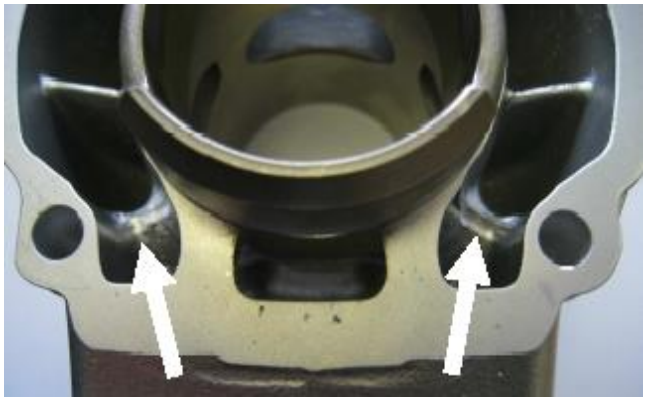

All ports have chamfered edges to prevent ring snagging. Any additional machining is not permitted. (see picture below).

6.22 / Maximum bore	54,035mm (measured 10mm above the exhaust port)
6.23 / Cylinder measurements	Height of cylinder should be 86,70 mm (-0,05 / + 0,10 mm)  Exhaust port timing The "exhaust port timing" (distance from the top of the cylinder to the top of the exhaust port) has to be checked by means of the template (ROTAX part no. 277 402). Insert the template for DD2 Max cylinder into the cylinder, and move the template (at the highest point of the exhaust port) as far as possible into the exhaust port. In this position the template may not touch the cylinder wall  Any modification is strictly forbidden! The flange for the exhaust socket may show either cast finish or machined surface. Machined surface can be either flat or show a circular sealing bump (see images below)  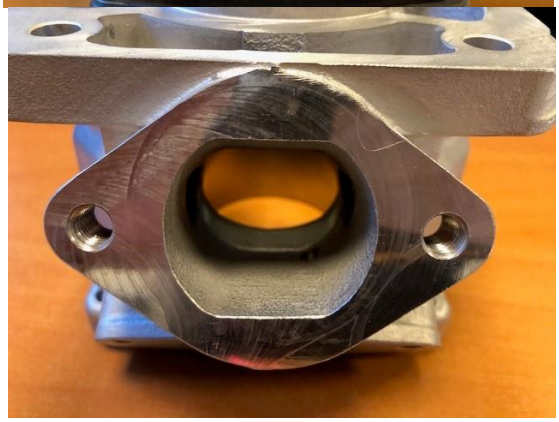

6.24 / Power valve

Electronic timed system must be used only. System has to be used with all components fitted as shown in the illustration below. Only green coloured exhaust below (item 10) (Rotax part nr. 260 723) is legal to be used. The original compression spring has to be used.

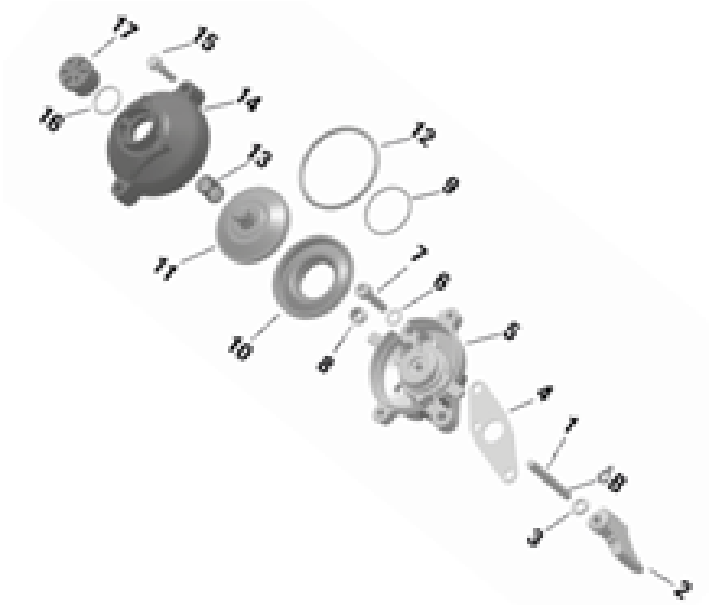

Fitting an original impulse nozzle (1) into the pressure hose in an allowed adjustment. The direction of the impulse nozzle inside the pressure hose is free.

.

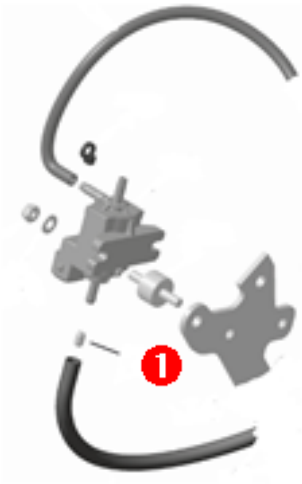

Length of the exhaust valve : 36,50mm + 0,20/ -0,30mm (see picture)
Width of collar 4,80mm ± 0,30mm (see picture)
Any modification is not allowed.

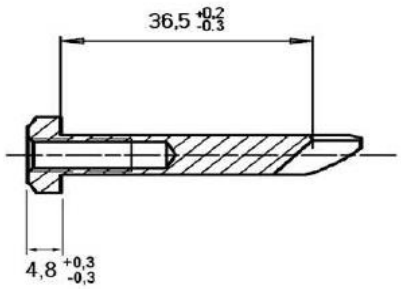

Power valve	If the piston is moved in direction top of cylinder and first time covering completely the exhaust port, it must be possible to insert the exhaust valve gauge (277 030) until it stops at the surface of the cylinder. This template must be at all times fully connected to the cylinder surface. It should not be possible to put a filler gauge of 0.25mm between.  Only the original gasket between cylinder and powervalve house is allowed. Modifications are not allowed.
6.25 / Inlet system / Reed valve assembly	The inlet manifold is marked with the identification code 267 410 of 267 411  Rotax part nr. : 267 410 (left image) Rotax part nr. : 267 411 (right image) Some factory flash removal may be present at the conjunction of the inside contour and the carburettor stop mounting face. No additional grinding or machining is permitted.

Reed valve assy.	The reed valve assy. is equipped with 2 petal stops and 2 reeds, each having 3 petals. The thickness of the reeds is 0,60 mm +/- 0,10mm. Modification is not allowed. 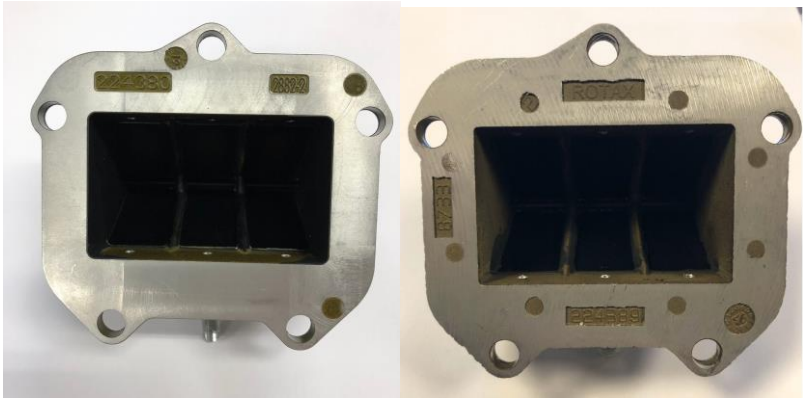 Both reed valve assy. are legal to be used. Rotax part no. 224 380 (left picture) Rotax part no. 224 389 (right picture)
6.26 / Conrod / Crankshaft	Stroke: 54,5mm ± 0,1mm Conrod has to show forged numbers "367" or "362" (see pictures)   Shafts of conrods are not machined. Grinding or polishing of shaft of conrod is not permitted. Crankshaft has to be unprocessed and may not be damaged. Ignition signal on crankshaft : Fit the template (Rotax part no. 277 391) on the crankshaft. Align the hole in the template for the big end pin with the big end pin of the crankshaft. The two edges of the signal machining on the crankshaft must be in line (+/-0,5mm) with the corresponding edges (MAX) of the template. 
6.27 / 2-speed gearbox	Primary shaft with 19 teeth for 1st gear and 24 teeth for 2nd gear Idle gear for 1st gear has to have 81 teeth Idle gear for 2nd gear has to have 77 teeth

6.28 / Balance drive

Balance drive gear must be fitted on crank shaft.
Balance gear must be fitted on primary shaft and must be aligned with the balance drive gear according the picture below :

Starter gear : Rotax part nr. : 434 844 see picture below is allowed to be used.
Balancing gear : engraved with nr. 635 745 00 see picture below is allowed to be used.

Starter gear : Rotax part nr. 434 843 see picture below is allowed to be used.
Balance gear : Rotax part nr. 635 748 see picture below is allowed to be used.

Balance gear :

Image below : balance gear with Rotax part nr. 635 745 00 engraved.
The fly weight of balance gear may show machined surfaces.
The minimum weight including cage may not be lower than 255,00 gr

Image below : balance without engraving
The fly weight of balance gear may show machined surfaces.
The minimum weight including cage may not be lower than 250,00 gr

Both type of balance gears are legal to be used !

Dimension A (widest part of balance weight) must be 57,0 mm +/- 0,5 mm.

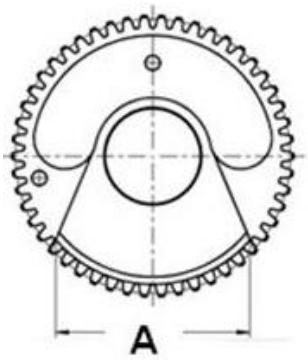

6.29 / Clutch

Clutch specifications at any time :

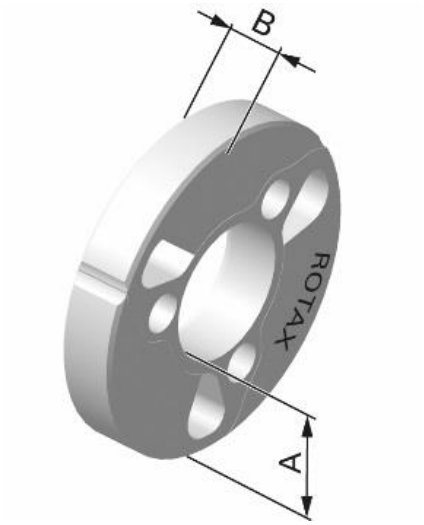

Thickness of clutch shoe (A) :
minimum : 24,10 mm

Measurements must be done at the 3 open ends of the clutch, 5 – 10 mm from the machined groove (all clutch shoes must be completely closed at measurement – no gap).

Height of clutch (B) :
Minimum : 14,45 mm

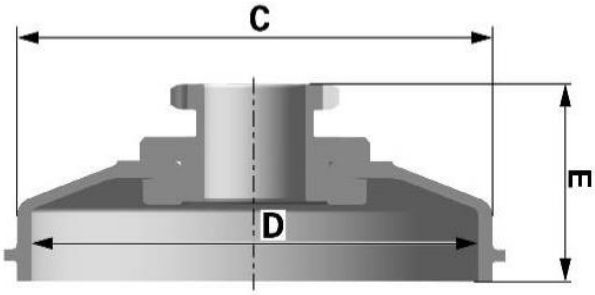

The outer diameter of the clutch drum (C) : minimum 89,50mm. Diameter has to be measured with a sliding calliper just beside the radius from the shoulder. (Not at the open end of the clutch drum).

The inner diameter of the clutch drum (D) : maximum 84,90mm. The inner diameter has to be measured with a sliding calliper. The measurement has to be done in the middle of the clutch drum (in the contact area between clutch and clutch drum).

Clutch drum height with sprocket (E) : minimum : 39,50 mm.

6.30 / **Primary drive**	Original primary drive gears (4 & 5) of following gear ratio options must be used only. Following combinations are legal to be used : **32 / 65** **33 / 64** **34 / 63** **35 / 62** **36 / 61** **37 / 60** **38 / 59** 
6.31 / **Gear shifting**	The 2-speed gearbox has to be operated from the steering wheel via two bowden cables. Aluminum shift paddles. Cutting of the original aluminium paddles or adding of non-original parts is not allowed. Mounting the shift paddles (item 31) on the bottom or top side of the whip (item 25) is an allowed adjustment. Optional parts (item 36 – 38) can be mounted on the shift paddle (item 31) in any position. Bending the aluminium shift paddles to align them to the steering wheel is an allowed option.

	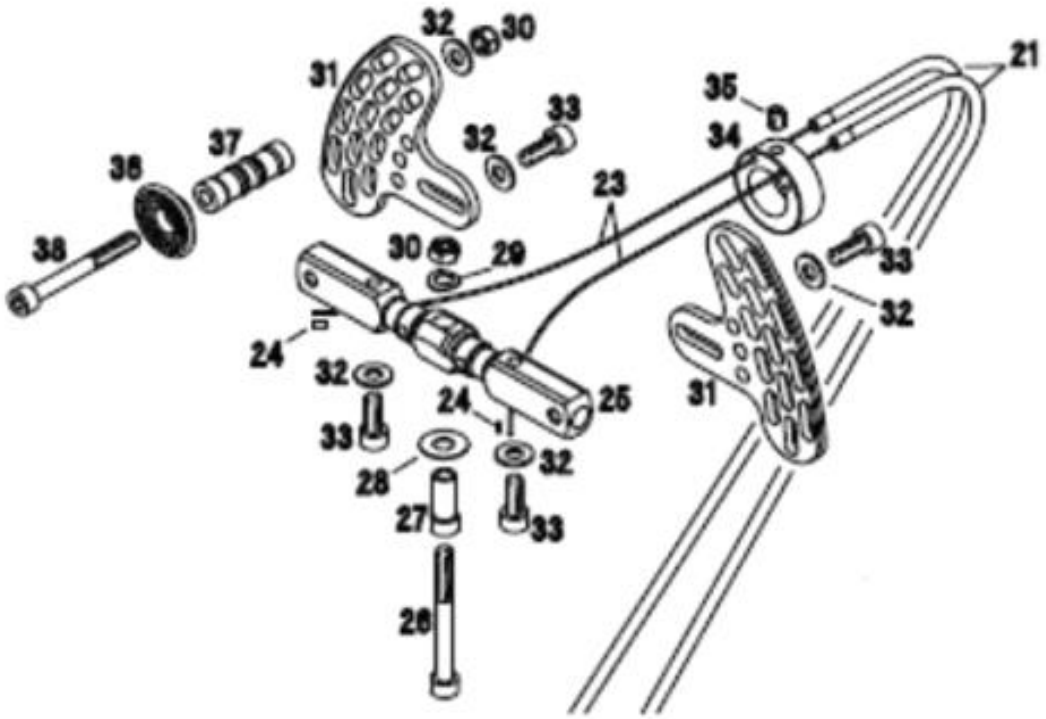
6.32 / Crankcase	As supplied by the manufacturer. No grinding/polishing is permitted in the two main transfer passages as well as in the crank area. Machining maybe evident in the crankcases in the area identified in the picture. 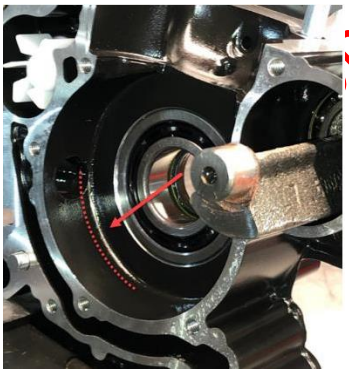 Black coated EVO crankcases must be used.
6.33 / Crankshaft main bearings	Crankshaft main bearing 6206 from FAG is allowed only. The bearings must be marked with 579165BA or Z-579165.11.KL or Z-579165.21.KL (see picture) 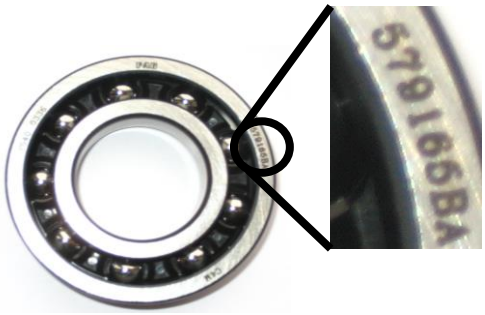
6.34 / Ignition system	DD2 EVO Dellorto ignition system. Ignition coil with separate electronic ECU box (Rotax

nr. 666820). The ECU box is still legal to be used if the sticker is removed.

At the mounting versions as shown in the left illustrations, the ground cable of the cable harness has to be connected to the lower rubber buffer of the support plate.

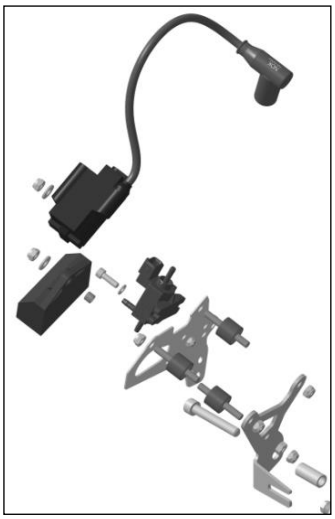

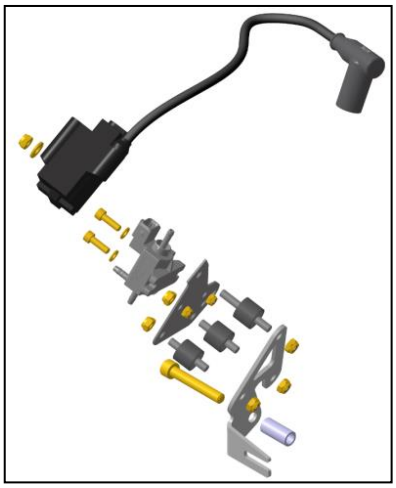

Ignition system

The visual appearance of the ignition coil must be identical with the pictures below. Ignition coil must show 2 pins at the terminal. The ignition coil is labelled with two stickers,
“BRP 666820” and “NIG 0105”. The ignition coil is still legal to be used also if one or both
stickers disappeared. Minimum length of the high tension cable of the ignition coil is 210 mm
(from outlet of ignition coil to outlet of spark plug) connector = visible length of cable.

It is allowed to fit a rubber buffer between the coil and the support.
The organization reserves the right at all times to exchange ignitions coils and / or ECU boxes with ignition coils and or ECU boxes from the organization.

The electrical contact at the shift assembly must be connected, as per picture:

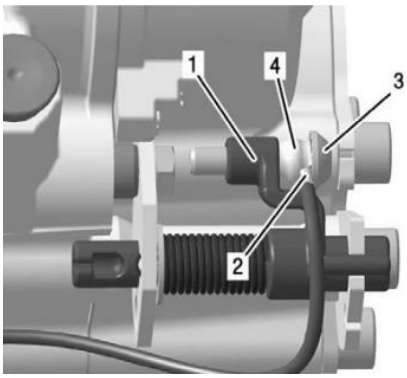

The ECU box can be checked with the ECU box tester (Rotax part nr. 276)

Start the test by pressing the button ✓ . After approx. 3 seconds the type of ECU box that is actually testes will be indicated in the second line of the display.
After aprrox. 30 seconds the result of the test will be indicated in the first line of the display.

The ECU tester has to indicate following results :

125 MAX DD2 category
1. 666816 MAX DD2
2. !! Test OK !!

The marking of the pick-up must show the following numbers in the first line 029600-0710.
A steel ball (diameter 3-5 mm) placed on circular surface of the sensor must stay in the center of the circular surface.

Mounting the pick up to the crankcase with a gasket additional to the original rubber sealing
ring of the pick-up, is a legal specification.

Additional gasket, Rotax 431 500, gasket thickness = 0,8 mm

Maximum two gaskets (Rotax 431 500) are allowed to be fitted.

Fitting position of the additional gaskets:
Crankcase – rubber sealing ring – additional gaskets – pick-up.

It is not necessary to install any additional gasket/s with the exception of the rubber sealing ring on crankcases with the machined sealing surface for the pick-up sensor.

6.35 / Spark plug / Caps	Following spark plugs are legal to be used : NGK GR8DI / NGK GR9DI Electrode distance maximum 1,00 mm 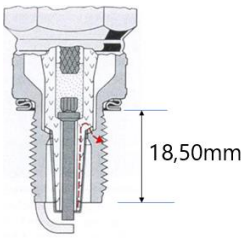 Maximum spark plug shaft including ring : 18,50 mm. Two versions of spark plug caps are legal to be used : Version 1. Red, marked with “NGK” Version 2. Red, marked with “ROTAX”  Version 1.  Version 2.
6.36 / Battery	Original batteries with following specifications are legal to be used : • Rotax type RX7-12B • Rotax type RX7-12L (lithium iron phosphate type) • YUASA YT7B-BS Specifications of the batteries should be readable at all times. Battery must be fitted with the original battery clamp and battery cover (according to illustration) and must be fixed to the chassis with both clamps (4 screws). Battery clamp with or without cable support is legal for use. Battery clamp must be mounted on the left side of the seat.

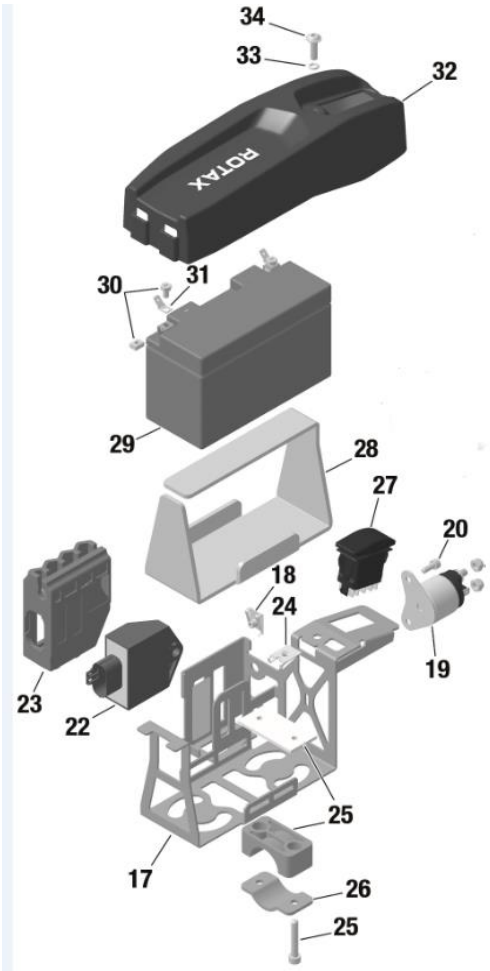

It is an allowed option to mount rubber buffers (4 pieces) between 17 and 25.

Two versions of the wiring harness are allowed to be used.

The differences between the two versions can easily be identified by the key points listed.

Wiring harness

	Wiring Harness (666 835)	Wiring Harness (666 836)
ECU Connector		
Charging Connector		
Solenoid Connector	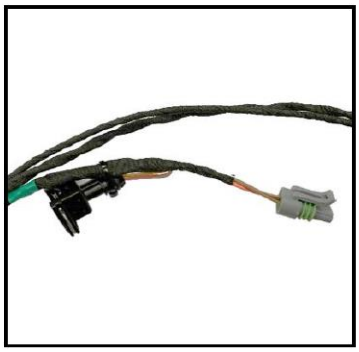	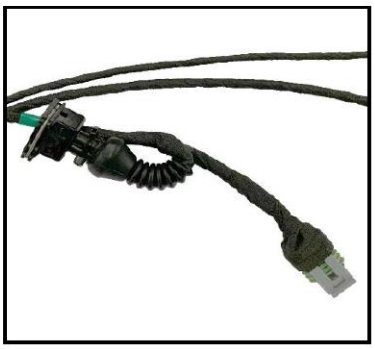

Only original plugs from the Rotax wiring harness are legal to be used.

6.37 / Carburettor	**DELLORTO Type VHSB 34**. Housing has to show the cast wording “VHSB 34”. Carburettor housing is stamped with “XS”. The complete inlet bore of the carburettor must show cast surface. Carburettor slide shows digits “45” in casting <u>Following specifications:</u> • Carburettor venturi insert 12,5. • Needle jet stamped with “DP267”. • Jet needle stamped with “K57”. • Start jet stamped with “60”. • Idle jet stamped with “60”. • Idle emulsion tube stamped with “45”. • Float lever according template (Rotax part nr. 277 400.) • Floats marked “4,0 gr” are legal to be used only. • Needle valve assembly stamped “150”. Needle of needle valve marked with diamond symbol “INC” only. • All jets must be correctly seated and securely fitted at any time (tightened)! • Settings of the carburettor adjustment screws (idle and idle air) are free. • Settings of main jets is free. • Optional carburettor plug (Rotax part nr. 261 030) is legal to be used. • Using the fuel sieve in the carburettor is not mandatory. (see picture)  Only original Dellorto parts are legal to be used. **See checklist DELLORTO for further info.**
6.38 / Fuel pump	MIKUNI fuel pump, type DF 44-210 is mandatory. Fuel pump must be mounted on the support bracket, Rotax part nr. 651 055 or 651 056, attached to the clutch cover (see image). Mounting the fuel pump with the two original rubber buffers to the chassis is an allowed option. In this case the fuel pump must be mounted below the inlet center line of the carburettor. 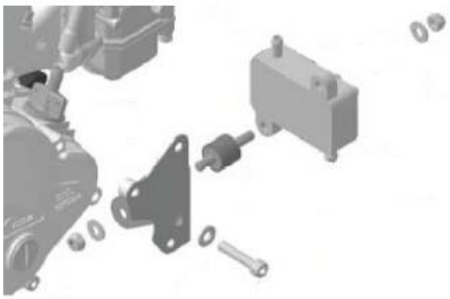

6.39 / Fuel filter	It is **not mandatory** to mount a fuel filter, but if a fuel filter is mounted only the version showed in the picture below is allowed. Rotax part nr. 274 161.  Except the fuel line, the fuel pump and the original fuel filter no additional parts are legal to be mounted between the fuel tank and carburettor.
6.40 / Radiator	Only the original radiator, with ROTAX part nr. 295 926) is legal to be used. Cooling area : Height: 290 mm Width: 196 mm Thickness of radiator: 34 mm  The removal of the thermostat from the cylinder head cover is an allowed modification. Radiator must be mounted wilt all components. The removal of the radiator flap is an allowed option. To apply tape (neutral tape without advertising only) around the radiator is an allowed modification to control the air flow through the radiator. Using a plate to control the air flow is not an allowed option. Tape may not be removed or loosen from the radiator during operation on the track. Any other non-original device to control the air flow through the radiator is prohibited. The radiator has to be mounted on the left side of the driver seat.
6.41 / Engine coolant	Plain water without any additives has to be used. The venting of the radiator should end in a reservoir.

6.42 / Airbox

Intake silencer with integrated, washable air filter has to be used with all parts. and has to be mounted, in the original shape, on the support bracket with two screws (in dry and wet conditions).

Only original Rotax parts are legal to be used.

The intake silencer case (pos 1) is marked on the inside with the Rotax part no. 225 012
(4 clips) or 225 013 (5 clips).

The intake silencer cover (pos 2) is marked on the inside with the Rotax part no. 225 022
(4 clips) or 225 023 (5 clips).

Two versions of air filters (pos 3) are legal to be used. Version 1, with integrated steel frame.
Version 2, with separate plastic frame (pos 4).

At intake silencer cover (pos. 2, Rotax part no. 225 022), it is mandatory to fit the O-ring (pos. 6) on the intake silencer tube (pos. 5)

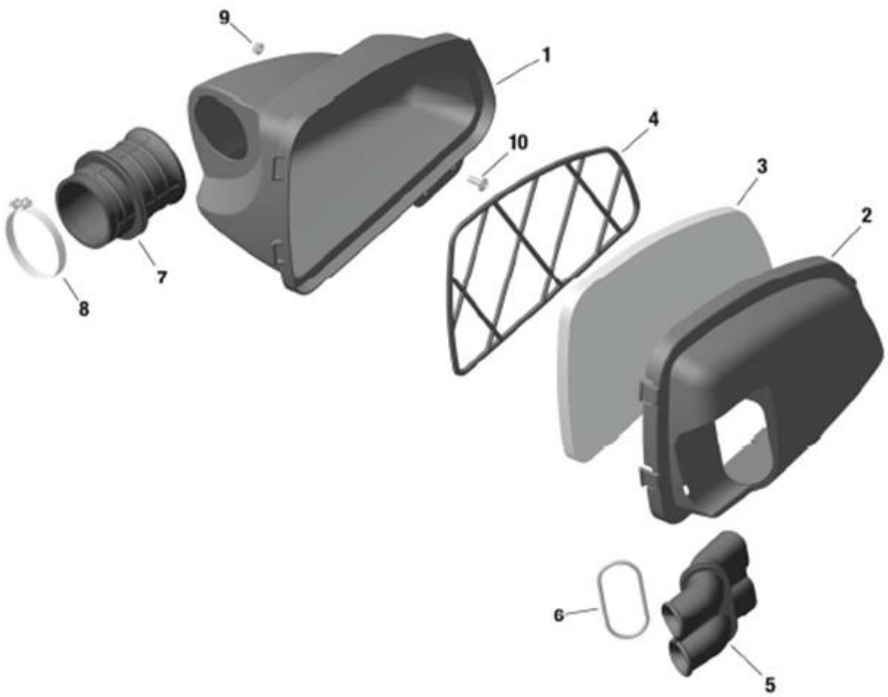

The air filter must be assembled between the intake silencer case and the intake silencer cover that the whole area of the intake silencer case is covered.

Sealing the top of the intake silencer using adhesive tape is an allowed modification.
At wet condition it is not allowed to attach anything to the air box to protect the air inlet from
water spray.

6.43 / Exhaust system

Exhaust system, Rotax EVO (Rotax part nr. 273 180) is mandatory to be used.

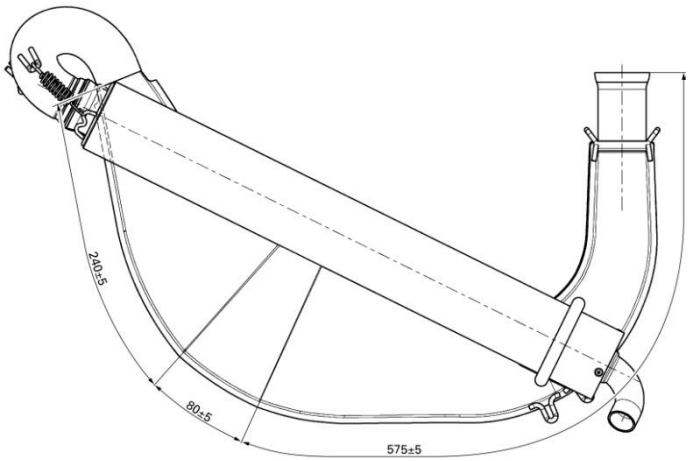

Turned pipe with 180° elbow and silencer are two separate pieces. The silencer is fixed with two springs to the 180° elbow and two springs to the tuned pipe. To fit a 3rd original spring (crosswise at the ball joint connection between 180° elbow and silencer) is an allowed option. The silencer has to be mounted in a position where the direction of the 90° elbow outlet (direction of the hot exhausts gasses) does not harm any component of the chassis. The original design silencer end cap with 90° elbow is mandatory to be used.

The original Rotax isolating mat (Rotax nr. 297981) is mandatory.
Replacing the perforated cover and isolating mat are legal to be replaced by original Rotax parts.
The isolating mat should cover the perforated cover at any time.
Replacing the original rivets of the silencer end cap by 4mm metric screws and corresponding locking nuts is an allowed modification.

Additional to the standard isolation mat a steel isolation mat (Rotax part nr. 297983) of the square dimension of 165 (+10mm) is legal (not mandatory) to be assembled underneath the standard isolating mat according to the illustration below :

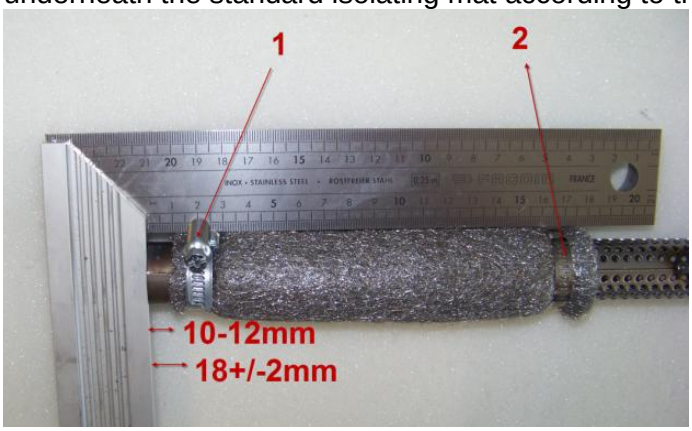

Clamp (1) must be fitted at a distance of 18 (+/-2mm), measured from the end of the tube.
Clamp (2) must be fitted at the end of the perforated tube to the beginning of the steel isolating mat is a specification for assembly purpose only.
Both clamps (1 and 2) are mandatory to be fitted and tightened.

	The exhaust system should be mounted to the chassis by using the two original mounting brackets. Rubber buffers are mandatory to be placed between the system and chassis. The use of maximum 4 pieces of original Rotax exhaust springs, to fix the exhaust system to the cylinder is allowed. Any other item is not allowed. Welding a socket on the top of the exhaust system for measuring the exhaust gas temperature is an allowed modification. Distance : 50-80mm from the ball joint. Welding at the exhaust system is only allowed in case of a repair. Modifications are not allowed. The organization reserves the right at all times to change exhaust systems from drivers with exhaust systems from the organization.
6.44 / Exhaust restrictor	Only restrictor Rotax.nr. 273 190 including seal ring is legal to be used. The measurement (C) must be at least 15,5mm 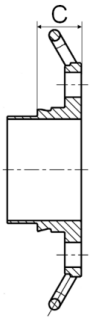 
Length of inlet cone	575 mm +/- 5mm,
Length of cylindrical part of exhaust pipe	80mm +/- 5mm
Lengte end cone	240mm +/- 5mm (buitenom gemeten)
Diameter hole end of tube	Maximum 22,5mm
Total length end silcencer	Minimum 500mm +/- 1 mm
6.45 / Fuel test	The organization has the reserves to test the fuel at any time.
6.46 / Fuel	It is only allowed to use fuel with a 98 octane. Checks will be done with a Digatron DT-47FT fuel tester which is calibrated in pure liquid cyclohexane. If the value (result) of the check is higher than +60 or lower than -30, the driver will be disqualified from the session. Each race the organisation will recommend a fuel station. If fuel is changed by the organisation, the driver will receive, from the designated fuel station, 98 octane fuel that is mixed with 2% Xeramic XPS DYE oil.